R290 Commercial Heat pump (with WIFI APP)

TECHNICAL MANUAL

Applicable model:
PW150-DKZLRS-E

Important safety instructions
Read and follow all of the instructions
Save these instructions

Version:1.0

Update date:20240816

WARNING

WARNING

The refrigerant R290 (Propane) is flammable and it must be handled only by competent and responsible operators, under the conditions specified in the safety regulations in force.

R290

⚠ Before starting any operation read this manual and pay particular attention to Section "**Safe Handling of R290 Refrigerant**" providing information on flammable refrigerants.

Catalogue

Preface 1
Safe Handling of R290 Refrigerant 1
1.Safety Procedures 6
2.Working principle 10
3.Specifications 11
3.1 Dimensions (in mm) 11
3.2 Product data 12
3.3 Key Components 13
3.4 Exploded diagram 19
4.Selection 20
4.1 Heat Pump Selection 20
4.2 Domestic Hot Water Tank 21
4.3 Circulation Water Pump 23
4.4 Buffer Tank 24
4.5 Air Pressure Tank 24
4.6 Three Way Valve 24
4.7 Safety Valve 25
4.8 Exhaust Valve 25
4.9 Water Filter 25
4.10 Water replenishment valve 26
4.11 Waterway antifreeze protection 26
5.Installation 28
5.1 Installation method (Heating, Cooling and Domestic hot water) 28
5.2 Preparation work and precautions before installation 29
5.3 Installation position 34
5.4 Installation details 35
5.5 Sitting the Heat Pump 38
5.6 Drainage and Condensation 39
5.7 Water system connection 39
5.8 General Operating Guide 42
5.8 The User's Guide 42
6.Electrical connection 44
6.1 Notes for electrical wiring 44
6.2 Electrical wiring 44

6.3 Wiring diagram 55
7.Commissioning 56
7.1 Precautions 56
7.2 Inspection before start up 56
7.3 Trial Operation 56
8.Operating Heat Pump 57
8.1 Controller Panel 57
8.2 Display Icon 57
8.3 Menu Structure 58
8.4 Startup & Shutdown 63
8.5 Operation Parameter Check 65
8.6 Unit software version query 67
9.General Maintenance 68
9.1 Daily inspection of heat pump 69
9.2 Maintenance of Main Structural Components 69
9.3 Maintenance of Main Electrical Components 70
9.4 Maintenance of Main Water pipeline Components 70
9.5 Maintenance of anti-freeze 71
9.6 Refrigerant Charging 72
9.7 Precautions for heat pump operation in summer 73
10.Fault list and trouble shooting 75
10.1 Controller fault code 75
10.2 Owner Inspection 75
10.3 Trouble shooting 76
11.WIFI connection and operation 97
11.1 Usage Notice 97
11.2 APP Download 97
11.3 Connect Your Phone to Wi-Fi 97
11.4 Check the device WIFI status 97
11.5 Add Device 98
11.6 Interface style 101
11.7 Equipment sharing 102
Appendix 104
A.User Parameters Explanation 104
B.Commissioning Checklist 106
C.Reference parameters of the operation state for the heat pump 109

Preface

The R290 Full DC Inverter air source heat pump transfers heat from the surrounding air to the water, providing high temperature hot water up to 78℃. This high-temperature heat pump is widely used for heating. With innovative and advanced technology, heat pumps can operate at ambient temperatures of -25℃, ensuring compatibility with conventionally-sized radiator-based systems without having to complement other equipment. Compared with the traditional fuel / LPG boiler, the R290 full DC frequency conversion air source heat pump can reduce carbon dioxide emissions by 50% and save operating costs by 80%. R290 full DC inverter air source heat pump is a kind of efficient, energy saving, environmental friendly equipment, used for indoor heating, refrigeration and domestic hot water. It can be used in any type of indoor machine, such as a fan coil, radiator, or floor heating pipe, to provide heating or hot water. Monoblock heat pump can also be used in multiple indoor units.

Declaration: This device is consistent with the ERP testing device

Safe Handling of R290 Refrigerants

Please follow these safety instructions closely to prevent accidents

1. The heat pump unit contains flammable refrigerant and belongs to the A3 safety group according to ISO 817 and ANSI / ASHRAE Standard 34. Contains the flammable refrigerant R290 (propane C3H8). If a leak occurs, the escaping refrigerant may create a flammable or explosive atmosphere in the ambient air. Define a safe area around the outdoor unit with special requirements for equipment maintenance.

2. Hazard explosion risk:

The leaking refrigerant may create a flammable or explosive atmosphere in the ambient air. Take the following measures to prevent fire and explosion in the safe area:

2.1 Keep away from ignition source, such as naked flame, high temperature surface, electrical equipment without ignition source, and mobile devices with integrated batteries (such as mobile phones, health watches, etc.).

2.2 Allowed tools: All tools working in safe areas must meet the standards and regulations applicable to A2L and A3 safety group refrigerants, such as brushless machinery (wireless screwdriver), pumping equipment, waste containers, installation auxiliary tools, vacuum pump, conductive hose, mechanical tools made of non-spark generating materials, etc. Note that the tool must also apply to the range of pressure used. The tool must be in good condition.

2.3 The electrical equipment must meet the requirements of the explosion risk area.

2.4. Do not use flammable materials, such as sprays or other flammable gases.

2.5 Discharge static electricity: before starting work, safely touch grounded objects, such as ground wire or metal water pipe.

2.6 Do not remove, block, or bridge the safety equipment.

2.7 Prohibit to made any change of the heat pump inlet/outlet pipe, electrical connection or cable

2.8 No components or seals shall be removed.

3. Special Notes for maintenance of heat pump unit

It is necessary to power off both the indoor and outdoor units, especially a separate fuse or main isolating switch. Check that the system is no longer charged before maintenance.

Note: Besides the control circuits, there may also be some multiple power supply circuits.

3.1, R290 refrigerant (propane) is a colorless, tasteless, flammable gas, which forms an explosive mixture with air. During handling, air must be emptied and the discharged refrigerant is properly handled by an authorized contractor.

Implement the following measures before starting the refrigerant Circuit inspection work:

■ Check the refrigerant circuit with any oil/gas leakage.

■ Ensure adequate ventilation throughout the work period, especially in the floor area. Ensure that the air ventilation volume is enough or take out other ventilation measurement.

■ Protect the surrounding area.

■ Notify all maintenance personnel and other personnel nearby the heat pump.

■ Check the area around the heat pump for flammable substances and ignition sources, and remove all flammable substances and ignition sources.

■ Before, during, and after maintenance work, use R290 detector to check the surrounding area for any escaping refrigerant risk. Ensure that the refrigerant detector does not generate any sparks and must be properly sealed.

3.2 Carbon dioxide or powder fire extinguishers must be prepared in the following cases:

■ The refrigerant is being discharged.

■ The refrigerant is being added.

■ During the welding work

■ Display of no-smoking signs area.

WARNING: Touching component with electricity may cause serious damage. Some components may maintain electric charge even after the power is turned off. Make sure to wait at least 4 minutes to ensure that the voltage is fully dissipated before removing the Casing

■ Make sure the System is securely connected.
■ Wear appropriate personal protective equipment for any work.

DANGER: burns or scald. Cold surfaces may cause frostbite.
■ Turn off the equipment and let it cool or heat up before performing the maintenance service.
■ Do not touch the hot or cold surfaces on the equipment, fittings, or pipes.

DANGER: Leaking refrigerant can cause fire and explosion and very serious injury or even death.
■ Do not drill or heat the refrigerant circuit filled with refrigerant.
■ Do not operate the air valve unless the filling valve or pumping equipment is connected.
■ Take measures to prevent electrostatic touch.
■ NO SMOKING！ Prevent bare flames and sparks. Never turn ON/OFF of ligting or other electrical devices.
■ Components containing or ever containing refrigerant must be indicated and stored and transported in well-ventilated areas in accordance with applicable regulations and standards.

DANGER:Direct exposure to liquids and gaseous refrigerants may cause serious health damage, such as frostbite and / or burns. If inhaled, it may a risk of suffocation.
■ Prevent the direct contact with the liquid and gaseous refrigerants.
■ Wear personal protective equipment when handling liquids and gaseous refrigerants.
■ Do not inhale the refrigerant vapor.

DANGER:Refrigerant at high pressure: applying mechanical load on pipelines and components may cause leakage in the refrigeration circuit. Do not apply mechanical load on pipelines and components, such as by supporting or placing tools.
Hot and cold metal surfaces of the refrigeration circuit may cause burns or frostbite if the skin comes into contact with these surfaces. Wear personal protective equipment to prevent burns or frostbite. The hydraulic components may get freezed when removing the refrigerant.

4. These instructions shall apply only to qualified contractors:

■ Work on a refrigeration circuit with a flammable refrigerant (safety group A3), shall be performed only by an authorized heating contractor. These heating contractors must be trained in accordance with EN 378 Part 4 or IEC 60335-2-40 Section HH and have competency certificates issued by industry recognized bodies.
■ The brazing / welding of the refrigeration circuit shall be performed by qualified contractors per ISO 13585, AD 2000 and Data Sheet HP 100R certification. Only for contractors with the required process qualification and certification. All work must be performed within the scope of application and in accordance with the prescribed procedures. Welding / brazing work on the battery connection must comply with the pressure equipment directive (2014 / 68 / EU), with personnel and process certified by the notification agency.

■ The work of the electrical equipment can only be carried out by the qualified electricians.

■ Before the first operation, all safety-related key points must be inspected by a specifically certified heating contractor. The system must be operated by the system installer or a qualified person authorized by the installer.

4.1. Special Note of installation and maintenance work.

Please pay attention to the antifreeze protection

■ Thermal insulation of all the hydraulic pipes.

■ To activate the antifreeze function, connect the heat pump to the power supply before filling the secondary circuit. Turn on the power supply and open the switch on the indoor unit.

■ Only an appropriate fill water conforming to VDI 2035 standards, rather than a medium containing antifreeze, is used to fill the secondary circuit.

Please note to replace accessories

■ Repairing the safety function components may endanger the safe operation of the system, and spare parts and vulnerable parts not tested with the system may endanger their functions. The installation of unauthorized components and making unapproved modifications or transformations may endanger safety and may invalidate our warranty. When replacement, please use only the original spare parts provided or approved by the manufacturer.

4.2. Treatment method of refrigerant leakage

DANGER A refrigerant leak can cause fire and explosion and cause very serious injury or death. If inhaled, there is a risk of suffocation.

■ Make sure that the ground area of the outdoor unit is very well ventilated.

■ NO SMOKING！ Prevent bare fires and sparks. Never turn on or off the lights or electrical equipment.

■ Evacuate the personnel from the dangerous area.

■ Cut off the power supply to all the system components from a safe position.

■ Remove the ignition source from the dangerous area.

■ Notify user don not to introduce the ignition source into the danger area during the maintenance period.

■ Maintenance work must be carried out by an authorized contractor.

■ The system can only be restarted after the system repair is completed.

■ Prevent direct contact with liquid and gas refrigerants.

■ Do not inhale the refrigerant vapor.

DANGER Direct exposure to liquids and gas refrigerants can cause serious harm to health, such as frostbite and / or burns. Inhalation may cause a risk of suffocation.

4.3. When water leakage occurs in the heat pump

DANGER： There is a risk of electric shock if the water leaks from the equipment. Turn off the external isolators of the heating system (e. g., box, home distribution box).

DANGER： There is a risk of scald if the equipment leaks water. Do not touch the hot water.

If the heat pump get freezen, take the following measures:

Note that freezing in the fan area of the condensing disk and the outdoor unit may cause damage to the equipment. Note the following items:

■ Do not use mechanical items / tools to de-ice.

■ Before using the electric heating equipment, check the refrigerant circuit for leakage using the appropriate measuring equipment.

■ The electric heating equipment shall not be an ignition source.

■ The electric heating equipment must meet the requirements of EN 60335-2-30.

■ If the heat pump often get freezen (such as in areas where frost and fog often occur), install fan ring heating (accessories) for refrigerant R290 and / or electric belt heater (accessories or factory configuration) on the condensing plate.

4.4 Safety Guide for storage of heat pump

The heat pump has been filled with refrigerant R290 (propane) in the factory.

DANGER： Leaking refrigerant can cause fire and explosion, causing very serious injury and even death. If inhaled, there is a risk of suffocation.

Store the heat pump under the following conditions:

■ The storage site must have an explosion-proof plan.

■ Ensure that the storage site is adequately ventilated.

■ Temperature range for storage: -25°C to 70°C.

■ Only store the heat pump with factory protective packaging.

■ Protect the heat pump from damage.

■ The maximum number of heat pumps that can be stored in one location is determined by local conditions

4.5. The below regulations shall be followed:

■ National installation regulations.

■ Accident prevention regulations.

■ Environmental protection laws and regulations.

■ Pressure equipment regulatory requirements: Pressure Equipment Directive 2014 / 68 / EU.

■ Practice regulation from relevant industry associations.

■ Relevant country-specific security regulations.

■ Applicable regulations and guidelines for the operation, service, maintenance, repair and safety of refrigeration, air conditioning and heat pump systems containing flammable and explosive refrigerants.

1.Safety Procedures

Read and follow all the warnings and installation instructions before installing this product. Failure to comply with the safety warnings and installation instructions may result in serious injury, death, or property damage.

The following symbols are very important. Please be sure to understand their meaning as it involves the product and your personal safety.

Warning Precautions Prohibition

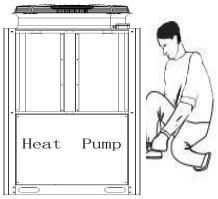	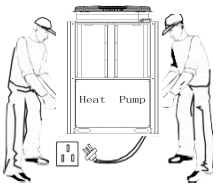	
The installation, disassembly and maintenance of the unit must be carried out by professional after-sales personnel. No changes to the structure of the unit, which may cause damage to the unit and personal injury.	To avoid an electric shock, please take precautions. When repairing electrical components, always disconnect the power supply for at least 1 minute. Even after a minute, use a multi meter to measure the voltage on the main power supply terminal. Before contacting a capacitor or electrical components, ensure that its voltage is below the safe voltage of the human body.	Be sure to read this manual before operation.
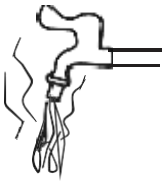	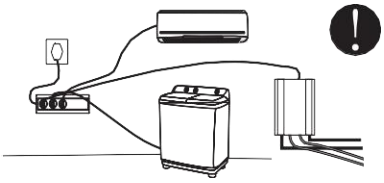	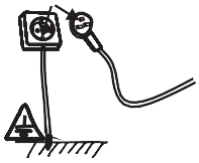
To get clean hot water, be sure to add a mixing valve in front of the tap and set it to the appropriate temperature.	Please use a dedicated socket, or a failure may occur.	The power supply used for the unit must be grounded well.
	The device is suitable for children and adults aged 8 years and older, and other personnel need to use it under the supervision of a fully competent guardian. Children are not allowed to use this device or to clean and maintain the equipment.	

		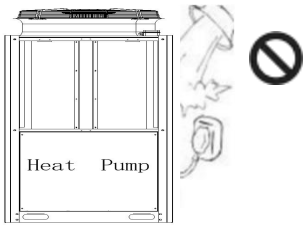
Do not touch the air outlet grille when the fan motor is running.	Do not touch the power plug with your wet hands.	Do not inject water or any liquid into the product as it may cause leakage or failure of the product.

	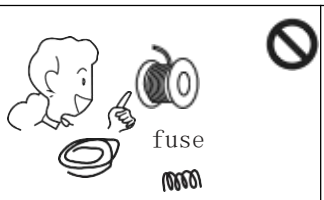	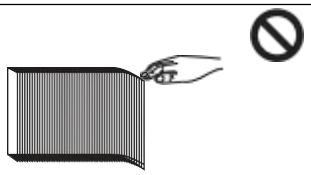
When the power cord is loose or damaged, please find a professional after-sales server for repair.	Please choose the correct fuse or circuit breaker as recommended. Steel wire or copper wire shall not replace a fuse or circuit breaker. Otherwise, it may cause damage.	Do not touch your fins with your fingers or you may be hurt.
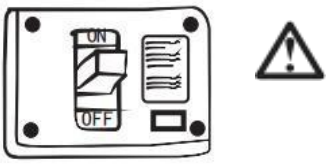		Main power cable 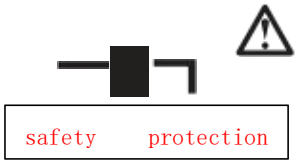
Please select the appropriate circuit breaker specifications according to the rated current of the product.	Disposal of waste batteries (if any). Please treat it according to the local garbage classification standards (as shown in the figure).	It is recommended to install a leakage current protection device (RCD) with a rated leakage working current not exceeding 30 mA.
1. It is recommended to fill the system with pure water. 2. If filling with city water, please soften the water and add a filter before entering heat pump. 3. Note: After filling the water, the pressure of water supply system shall be 0.15~0.8MPa		

Transport, storage and handling warning

1. The heat pump must be transported, handled and stored vertically. Tipping the machine may cause the compressor or other components damage.

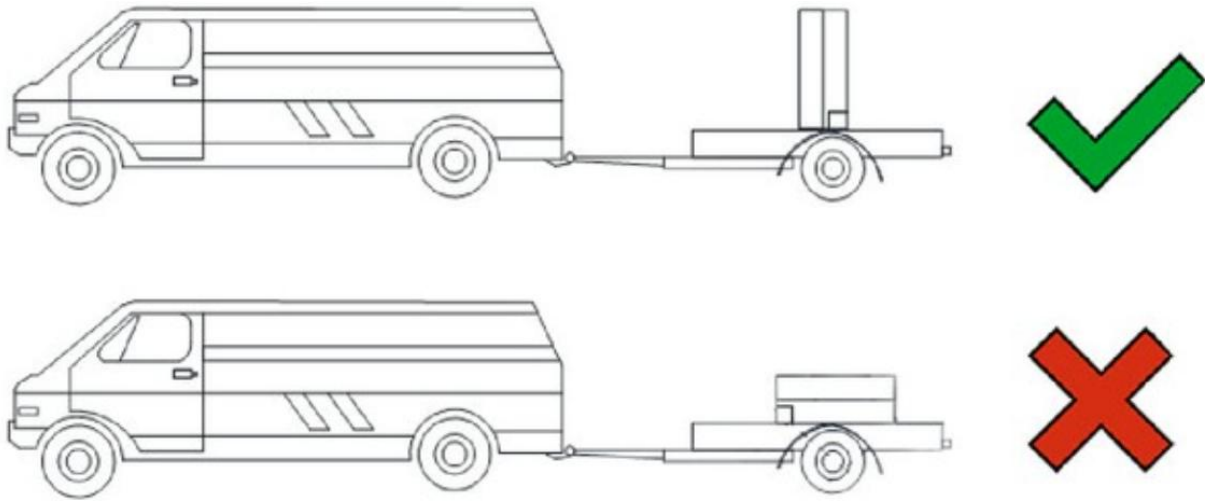

2. Do not twist, loosen or pull the external electric cables of the heat pump. Do not insert any sharp objects through the fan grille or into the fan itself.
3. Do not wash the interior of the heat pump with water as this may result in electric shock or fire. For any cleaning and /or maintenance operations, disconnect the main power supply.

Unit recycling and scrapping warning

This label indicates that the product should not be disposed of together with other household waste throughout the EU region. To prevent the potential harm of uncontrolled waste disposal to the environment or human health, material resources should be responsibly recycled and utilized. To return the device you have used, please use a recycling and collection system or contact the retailer who purchased the product. They can use this product for environmentally friendly and safe recycling.

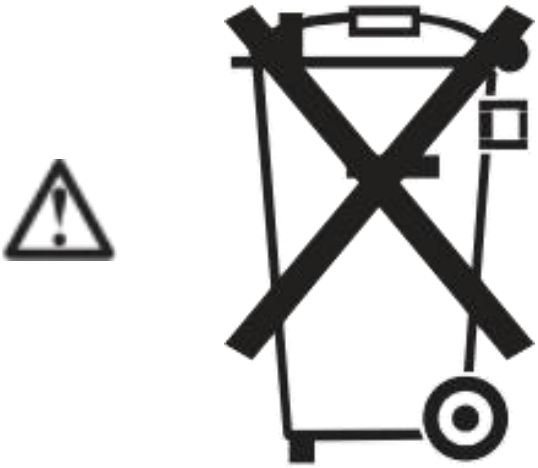

WARNING!

1. Unqualified parties are not allowed to install the equipment by themselves, and a qualified installer is a must. The consequences (safety accidents and use effect) caused by Unqualified parties shall be borne by the users themselves.
2. Except for the guidance of professional personnel, non-professional party shall not remove the machine or machine parts without authorization, otherwise accidents or machine damage may occur.
3. Do not use towels, paint, gasoline, alcohol and other flammable items while near this machine, as this

could cause a fire.

4. The main power switch of the unit should be placed in a place out of reach of children to prevent children from contacting the power switch and causing potential safety risks.

5. In thunderstorm, please cut off the main power switch of the unit, otherwise it may cause damage to the unit.

6. The unit shall adopt independent power switch to avoid sharing the same circuit with other electrical appliances, and choose the power circuit and circuit breaker (with leakage protection function) that matches the current to supply power to the unit.

7. The unit must be installed with a specified cross-section grounding wire. Do not connect the ground wire to the ground wire for gas lines, pipes, lightning lines or telephone. At the same time, it must be reliably grounded to avoid accidents.

8. Do not forcibly cut off the power supply when the unit is running to avoid accidents.

9. When the unit is not in use for a long time, please discharge the water in the pipe, close the water pipe valve, and disconnect the main power supply switch to avoid accidents.

10. The unit shall use a special power supply, and the power supply voltage shall meet the rated voltage standard.

11. When the power cord is damaged, it is necessary to use the power cord specified by the manufacturer and replaced by professional maintenance personnel.

Precaution

1. Do not put your hand or foreign body into the air outlet, because the high-speed fan may endanger personal safety.

2. Do not remove the air guide net cover of the unit, otherwise the high-speed operation of the fan may cause personnel injury.

3. Lightning and other electromagnetic radiation sources may affect the device. If this happens, turn off the power supply and turn it on again.

4. When in use, make sure that the air in the pipe is completely discharged, and then open the replenishment valve to replenish water to the system.

5. Before operating the machine, read carefully about all the warnings and precautions.

6. "Warning" and "precautions" list various important safety-related matters, please strictly implement them.

7. The working environment of the unit should be far away from the fire source. In case of fire caused by line problems, immediately close the main switch and use a dry powder fire extinguisher to extinguish the fire.

8. Power supply must be cut off before repairing the unit.

9. It is forbidden to place objects on top of the device to avoid accidents caused by falling objects while the machine is running.

2.Working principle

Air source heat pump absorbs free energy from the air, and then transports the energy to cold water through the compressor doing work to heat large amounts of energy efficient hot water, thus realizing the needs of central heating and domestic hot water.

This commercial heat pump is designed with **two independent refrigerant systems, both of which have the same configuration.** A complete refrigeration cycle system consists of four major parts: Compressor, Evaporator, Condenser and Throttle device.

* **Evaporator:** low temperature, low pressure refrigerant go through evaporator, vaporizes into low-temperature and low-pressure steam;

* **Compressor:** compresses the refrigerant steam into high-temp high-pressure gas, which is discharged into the condenser.

* **Condenser:** refrigerant release heat energy to heat exchanger, and it returns from gas status to liquid status.The heat energy is absorbed by water, then the hot water is sent to indoor user's end through the water pressure.

* **EEV:** at last the refrigerant go through the electronic expansion valve, where its pressure is reduced, and then continues to the evaporator.

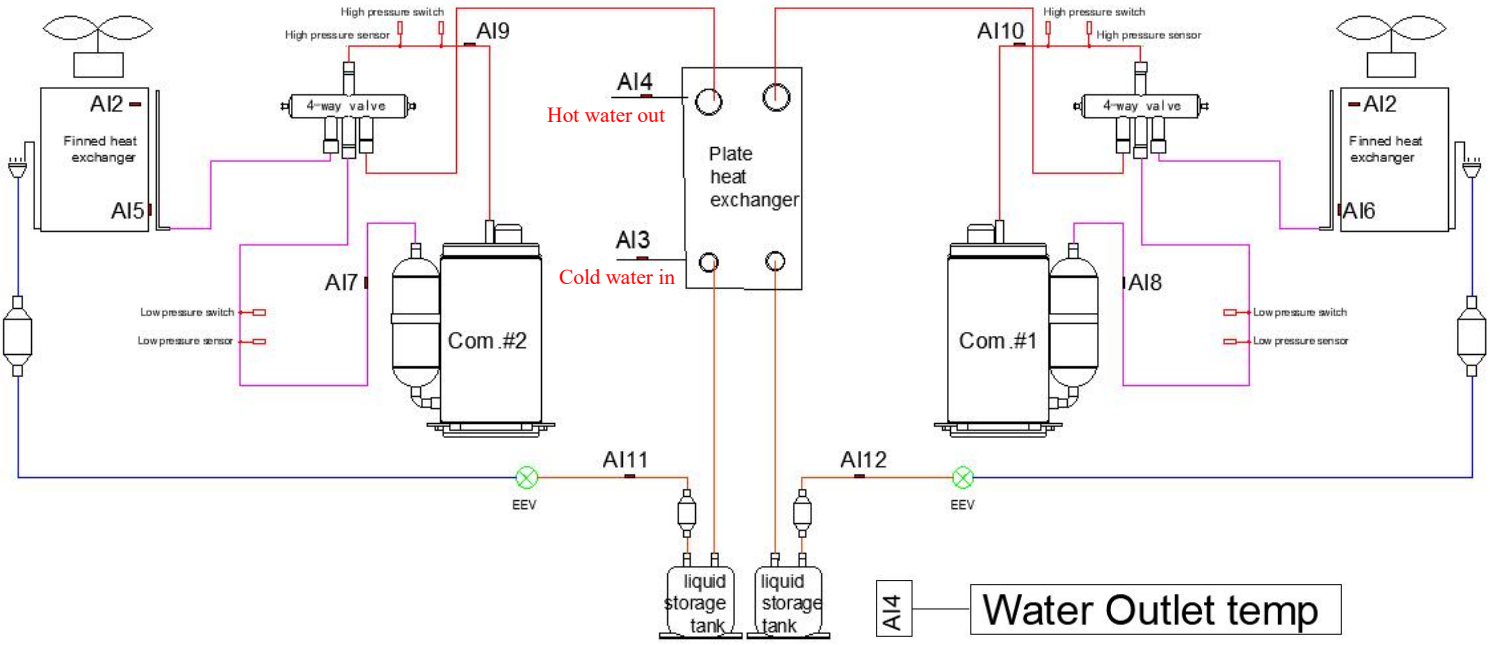

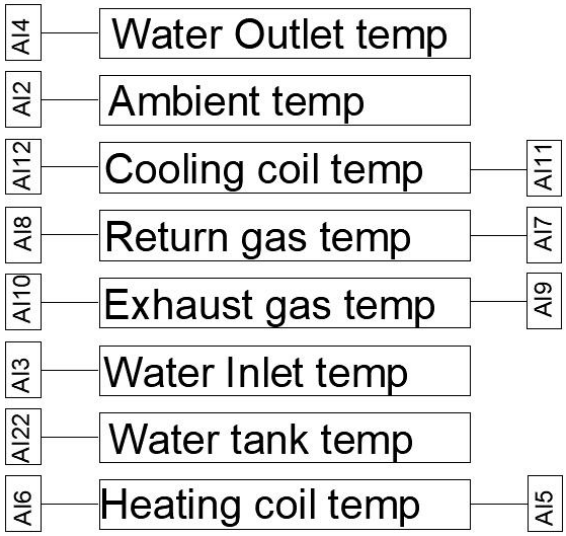

Note: AI3~AI12 are the temperature sensors that are standard from factory.

3.Specifications

3.1 Dimensions (in mm)

PW150-DKZLRS-E

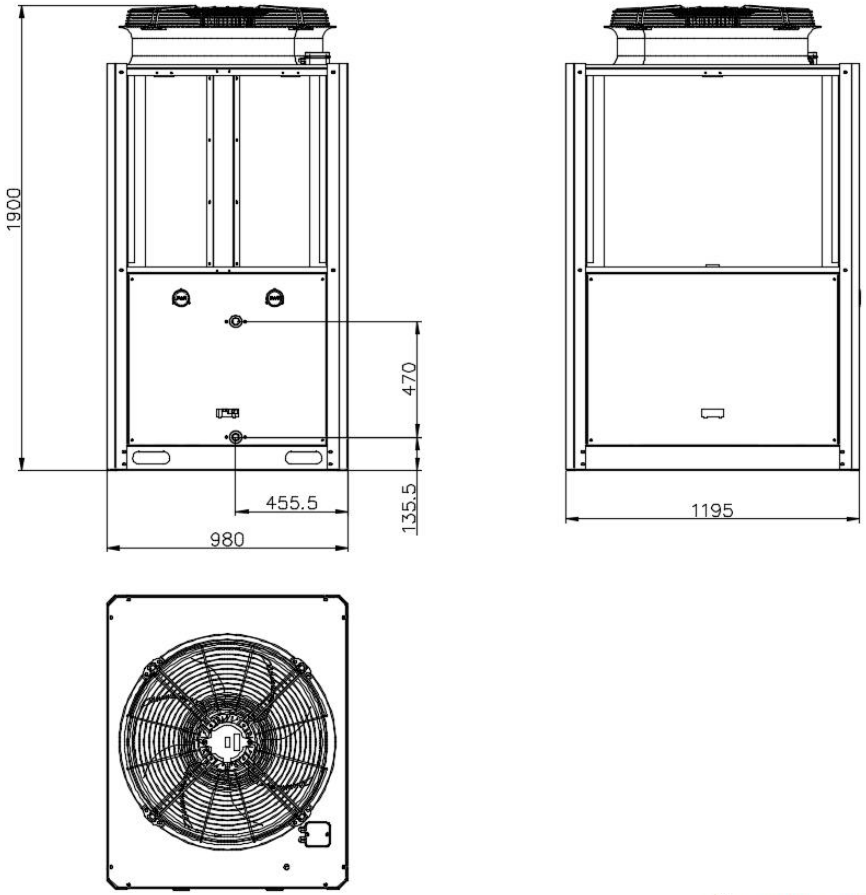

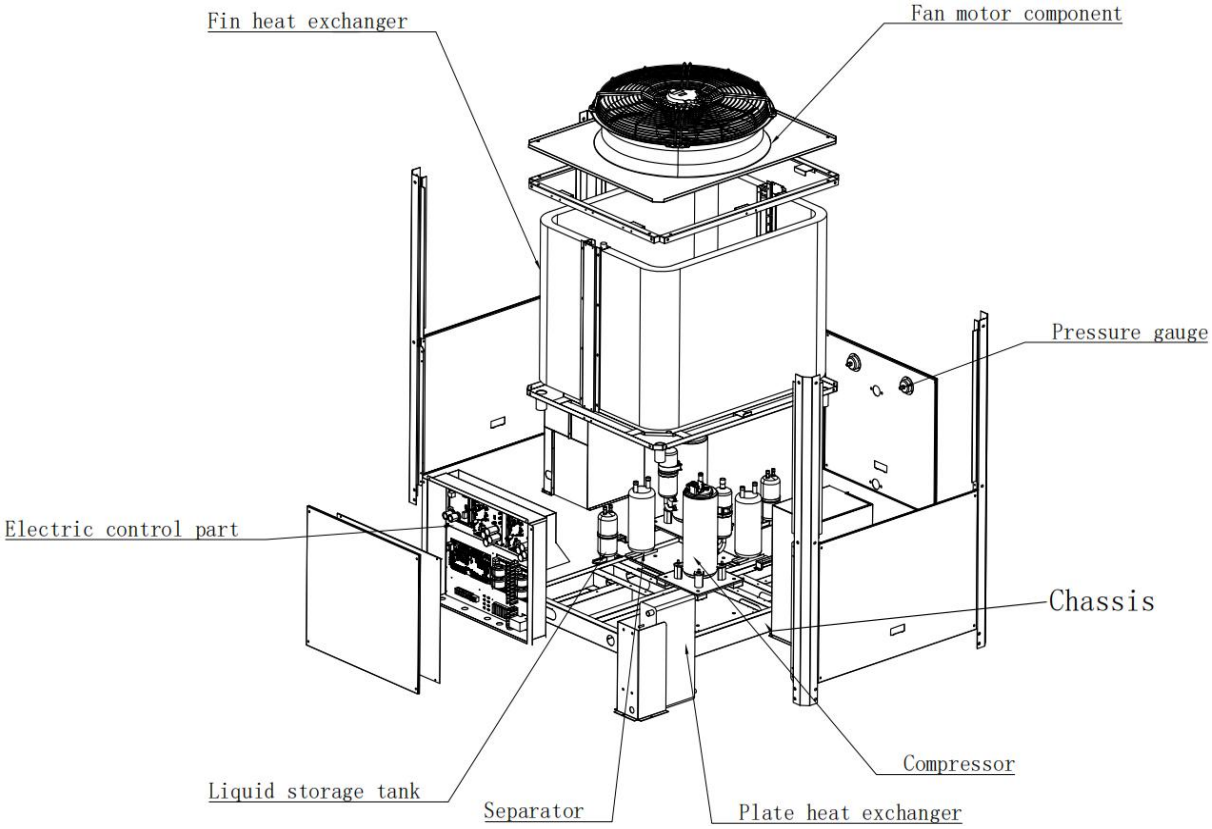

3.2 Product data

Model	PW150-DKZLRS-E
Heating Condition - Ambient Temp.（DB/WB）: 7/6℃，Water Temp.（In/Out）：30/35℃	
Heating Capacity Range (kW)	18.4~50
Heating Power Input Range(kW)	4.23~12.97
COP Range	3.85~4.3
DHW Condition-Ambient Temp.（DB/WB）: 20/15℃，Water Temp.（In/Out）：15/55℃	
Heating Capacity Range (kW)	23.8~68
Heating Power Input Range(kW)	4.23~15.46
COP Range	4.39~5.62
Cooling Condition - Ambient Temp.（DB/WB）:35/24℃，Water Temp.（In/Out）：12/7℃	
Cooling Capacity Range (kW)	13.8~34.5
Cooling Power Input Range(kW)	5.2~16.2
EER Range	2.12~2.65
ERP Level (35°C)	A+++
Refrigerant	R290/4.0kg
Power supply	380V/3Ph/50Hz/60Hz
Max. power input(kW)	19.93
Max. current (A)	30
Fuse or circuit breaker (A)	40
Wire diameter mm²	10mm²
Diameter of pipe (inch)	G1.5"
Noise dB(A)	≤62
Net Weight (kg)	370
Net Dimension (L/W/H) mm	1195×980×1900
Packing size(W*D*H)(Polywood)	1275*1060*2100
Operation Ambient Temp.	-25~43℃
Water outlet temperature (℃)	20~78℃(DHW)
Water outlet temperature (℃)	20~78℃（Heating）
Water outlet temperature (℃)	7~35℃（Cooling）

Note:
The above design and specifications are subject to change without prior notice for product improvement.
Detailed specifications of the units please refer to nameplate on the units.

Correct installation is required to ensure safe operation.The requirements for heat pumps include the following:

1. Dimensions for critical connections.
2. Field assembly (if required).
3. Appropriate site location and clearances.
4. Proper electrical wiring.
5. Adequate water flow.

This manual provides the information needed to meet these requirements.Review all application and installation procedures completely before continuing the installation.

3.3 Key Components

Item	Picture	Name	Function declaration
1		DC inverter compressor *2	The compressor is the heart component of the heat pump system. It is a "steam pump", which presses the low temperature and low pressure steam with high temperature and high pressure steam to provide the refrigerant in the heat pump system cycle.
2		Plate heat ex-changer *1	It is a small plate heat exchange, its function is to reduce the exhaust temperature of the compressor, improve the compression ratio, improve the operation stability of the heat pump system at low ambient temperature; by increasing the over-cooling of the heat pump system and increasing the intermediate compression of the compressor, so as to improve the capacity and energy efficiency of the heat pump unit.
3	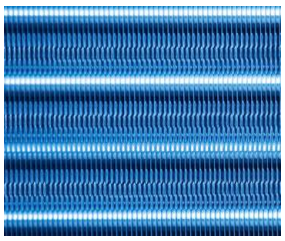	Finned type heat exchanger *2	The fin-type heat exchange can be used as a condenser and as an evaporator. Heating for the evaporator, the low temperature and low pressure liquid refrigerant evaporation into a gas, to absorb the heat in the air. For refrigeration condenser, the high temperature and high pressure gaseous refrigerant is condensed into a liquid of medium temperature and high pressure,

			and the heat is distributed into the air.
4		Reservoir *2	When the heat pump unit is running, the circulating amount of refrigerant in the system will change due to the change of the working conditions or the adjustment of the refrigeration capacity. After setting the reservoir, the liquid storage capacity of the reservoir can be used to balance and stabilize the refrigerant circulation volume in the system, so that the heat pump unit can always operate efficiently and reliably.
5		Gas-liquid separator *2	Separates the refrigerant returning from the evaporator to the compressor into gas and liquid to prevent liquid refrigerant from entering the compressor and disrupting the lubrication or damaging the pump body.
6		Electronic expansion valve *2	A throttling and depressurizing device that throttles medium temperature and high pressure liquid refrigerant into low temperature and low pressure liquid refrigerant.)
7		Four-way valve*2	Change the flow direction of refrigerant to realize the switching function of cooling, heating and defrost.
8		High pressure sensor *2 Low Pressure sensors *2	High pressure sensor measures the pressure in the heat pump system to ensure the circulation of refrigerant and reasonable cooling effect, in order to achieve the best cooling, heating or hot water supply effect. Users can directly view the pressure value on the status parameters of the online controller. Low pressure sensor protects the unit, compressor / fan frequency limit reduction function control, suction overheat control, low pressure is used for low pressure protection and overheat control.

9	 	Red high pressure switch *2 Black low pressure switch*2	High pressure switch: When the exhaust pressure of the heat pump system is higher than the protection value of the high pressure switch, the high pressure switch is disconnected and forces the unit to stop working to avoid damage to the unit. Low pressure switch: When the suction pressure of the heat pump system is lower than the protection value of the low pressure switch, the low pressure switch is disconnected and forces the unit to stop working to avoid damage to the unit.
10		Water flow switch *1	When the waterway of the heat pump system is cut off or the flow rate is low, the water flow switch is disconnected and the heat pump unit stops working.
11		DC circulation pump *1(Optional)	The circulating water pump provides power for conveying the heat transfer medium (water) in the heat pump water system, and then takes away the heat from the water side heat exchanger through the heat transfer medium (water) to raise or reduce the temperature of the heat transfer medium (water).
12		R290 refrigerant leakage sensor *1(Standard)	The refrigerant leakage sensor is used to detect and monitor the leakage of R290 refrigerant, ensuring the safety and efficiency of the system. When the leakage concentration exceeds 15% LFL, the system will sound an alarm and display fault code 209, reminding users to handle it in a timely manner to ensure safe use. The compressor and all electric heating will stop, and the fan is running at the lowest speed.

13		Outdoor fan (DC motor + wind blade) *1	The outdoor fan provides strong air convection in the fin heat exchange to enhance the heat transfer exchange effect.
14		Exhaust valve *1 (Standard)	The heat pump is built in an exhaust valve, which can discharge the air that enters the heat pump in real time during operation, ensuring more stable and efficient system operation.
The following parts are random accessories along with units and accessories often used in the installation.			
2		Operation controller *1	Accessories along with the machine, connect the circuit board for communication use to operate the unit).
3		Operating the display communication extension line (Four-core) *1	Accessories along with the machine, extension line connecting the circuit board and display; four-core communication line.

4		Heat pump rubber pad *8	Accessories along with the machine. Used for shock absorption and vibration protection of the foot of the main unit of the heat pump on site.
5		Manual exhaust valve (Pipe installation fittings)	When the unit is installed for the first time, the residual air in a few pipes cannot be discharged through the automatic exhaust valve. At this time it is necessary to manually unscrew the exhaust valve to discharge, and then manually close the exhaust valve after discharge.
6		safety valves (Pipe installation fittings)	When the pressure of the water system exceeds the design value of the safety valve, the safety valve automatically opens to relieve the pressure, control the water system pressure does not exceed the specified design value which plays an important role in protecting personal safety and equipment operation.
7		expansion Vessel (Pipe installation fittings)	The expansion Vessel plays the role of buffer against pressure fluctuation and partial water supply in the water system.
8		Three way valve (Pipe installation fittings)	Three way valve is used to switch the water circuit between hot water mode or heating/cooling mode.
9		Check valve (Pipe installation fittings)	Install a check valve on the water outlet connection in order to prevent back siphoning when water pump stops.
10		Y-Filter (Pipe installation fittings)	Filters can filter out impurities in the water system, ensuring good water quality.

11		Ball valve (Pipe installation fittings)	Install ball valves on the heat pump water inlet and outlet pipelines to control the flow of water.
12		Water pressure gauge (Pipe installation fittings)	Installed on the inlet pipeline of the heat pump, detecting the water pressure status.
13		Thermometer (Pipe installation fittings)	Installed on the inlet pipeline of the heat pump, detecting the water temperature status.
14		User's end water pump (Pipe installation fittings)	The circulating water pump provides power for the transportation of heat transfer medium (water) in the user's end water system, and then passes through the heat transfer medium (water). Remove the heat from the user's end and increase or decrease the temperature of the heat transfer medium (water).

3.4 Exploded diagram

PW150-DKZLRS-E

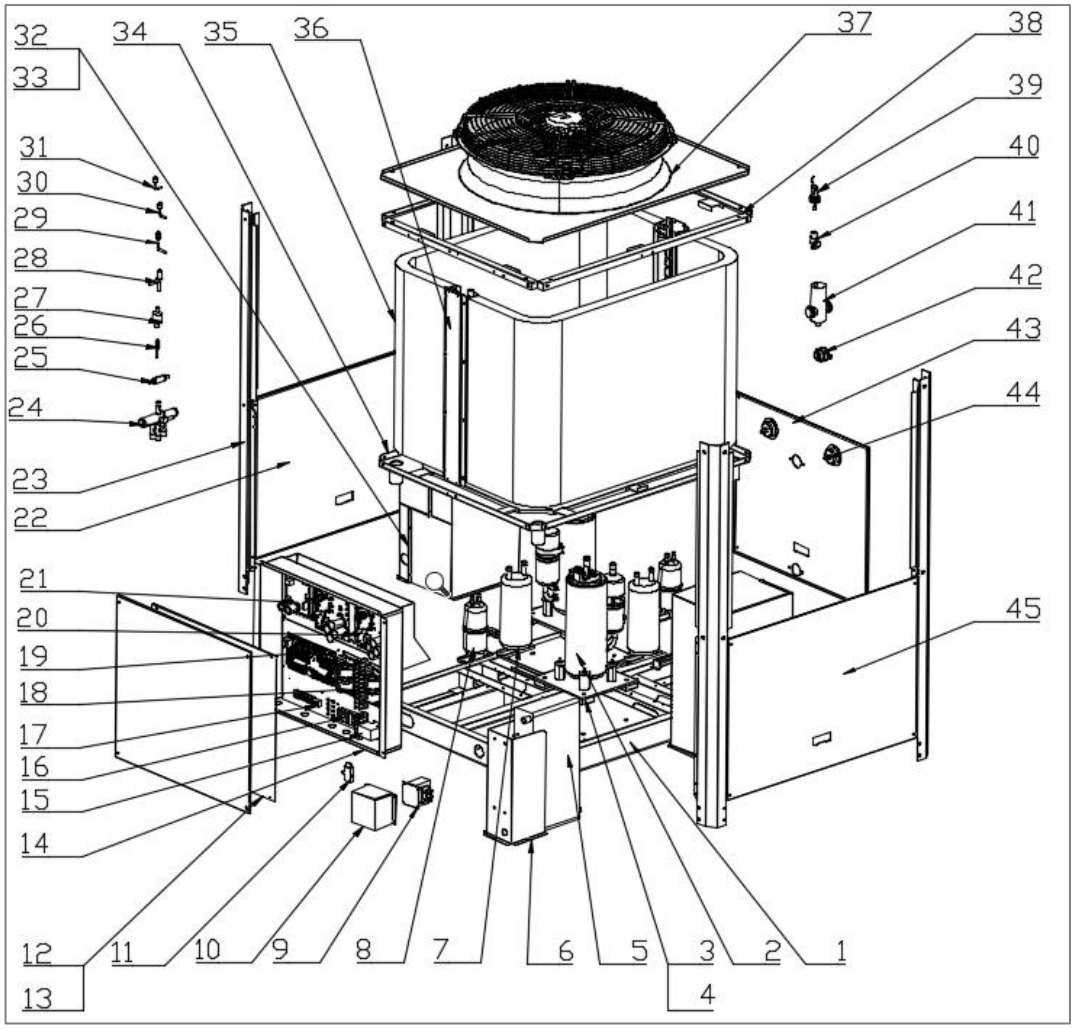

NO	Spare parts	NO	Spare parts	NO	Spare parts
1	chassis	16	transfer terminal block	31	low voltage switch
2	compressor	17	terminal block	32	compressor cover-1
3	rubber pad	18	variable frequency drive board	33	compressor cover-2
4	compressor pad	19	control board	34	water pan
5	plate heat exchanger	20	compressor driver board	35	fin heat exchanger
6	sheet metal fixing plate	21	fan drive board	36	heat exchanger connecting plate
7	separator	22	left side panel	37	fan
8	liquid storage tank	23	pillar	38	top frame component
9	reactance	24	4-way valve	39	water flow switch
10	sheet metal cover	25	one-way valve	40	safety valve
11	refrigerant leakage monitoring sensor	26	needle valve	41	exhaust valve
12	electric box cover	27	filter	42	water pipe joint
13	front side panel	28	electronic expansion valve	43	rear side panel
14	electric box	29	needle valve	44	pressure gauge
15	relay	30	high voltage switch	45	left side panel

4.Selection

4.1 Heat Pump Selection

Note: The working efficiency of heat pump is closely related to the environmental conditions, such as changes in ambient temperature, humidity, outlet water temperature, altitude, water pipe length, and insulation measures, all of which can affect the heating effect of heat pumps.

4.1.1 Calculate method

Generally, using the area indicator method, calculate the required cooling/heating capacity of the room based on the room area and cooling/heating load estimation indicators.

The estimation of cooling and heating load indicators for each building can refer to the following table:

No.	Building type	Cooling capacity(W/m^2)	Heating capacity(W/m^2)
1	Hotels, Guesthouses, Restaurants	150-250	60-80
	Guest Room (Standard Room)	80-110	
	Bar, Coffee shop	100-180	
	Western restaurant	160-200	
	Chinese restaurants, Banquet halls	180-350	
	Shops, Canteen	100-160	
	Atrium, Reception room	90-120	
	Office, School	110-140	
2	Gymnasium	280-450	120-160
	Competition Hall	120-300	
	Audience Lounge	300-350	
	VIP Room	100-120	
3	Exhibition hall, Showroom	130-200	90-120
4	Lecture hall	150-200	120-150
5	Library (Reading)	75-100	50-75
6	Apartments, Residential buildings, House	80-90	60-80

Remark: This table is only used as a reference indicator, and there may be slight differences between different regions. It needs to be considered comprehensively based on regional factors, building insulation performance, and building usage.

The above cooling and heating load estimation indicators are for energy-saving buildings, and for non energy-saving buildings, an increase of approximately 30% in load is required.

4.1.2 Calculation case

Taking a residential building in Germany as an example, the total area of the room is 400 m^2. In winter, the outdoor temp is -10 ℃. Please calculate the appropriate model and quantity of the R290 commercial heat pump series?

Step 1: Take its heat load index as 80W/㎡, and calculate the total heat load demand Q=400 × 80=32KW

Step 2: Query the R290 commercial heat pumps of Power World, and analyze the variable operating conditions table and curve chart of PW150. When the default water outlet temp is 35 ℃ and the outdoor temp is -10 ℃, it's maximum heating capacity is 34.9KW, which meets the load requirements. Therefore, **select one PW150 unit,** the model is PW150-DKZLRS-E. The performance curve is shown as below:

PW150-DKZLRS-E For heating																	
Ambient temp. (℃) 环温			-25	-20	-15	-12	-10	-7	-5	0	2	5	7	10	12	15	21
Water temp. outlet35℃	MAX	Heating Capacity（kW）	23.1	27.0	30.9	33.2526	34.9	37.4	39.1128	41.7	42.7879	46.7	49.3	55.8	60.1	63.1	69.0
		Input power (kW)	12.85	13.94	14.89	15.39	15.09	14.71	14	13.34	12.9495	12.96	12.97	13.03	13.07	12.96	12.77
		COP	1.80	1.9	2.1	2.16	2.3	2.5	2.7	3.1	3.3	3.6	3.80	4.3	4.60	4.9	5.40
	MIN	Heating Capacity（kW）	11.5	12.4	13.6	14.1	14.8	15.7	16.1	16.7	17.1	18.6	19.6	22.2	23.9	25.1	27.4
		Input power (kW)	3.97	4.31	4.32	4.36	4.31	4.28	4.26	4.00	3.93	3.97	4.01	4.03	4.04	4.01	3.95
		COP	2.89	2.89	3.16	3.23	3.42	3.65	3.78	4.18	4.36	4.70	4.89	5.50	5.92	6.26	6.94
Water temp. outlet45℃	MAX	Heating Capacity（kW）	19.1512	23.2	27.3	29.6913	32.1	35.8	38.2128	40.8	41.3	45.5	47.7	49.4	53.3	56.0	61.3
		Input power (kW)	13.2431	14.43	15.44	15.963	15.81	15.63	16	16.21	16.60	17.3	16.95	16.94	17	17.13	17.51
		COP	1.45	1.6	1.8	1.86	2.0	2.3	2.46	2.5	2.5	2.68	2.8	2.9	3.15	3.3	3.50
	MIN	Heating Capacity（kW）	9.7	10.7	12.0	12.6	13.6	15.0	15.7	16.4	16.5	18.2	19.0	19.6	21.2	22.2	24.4
		Input power (kW)	3.95	4.31	4.33	4.37	4.36	4.40	4.41	4.70	4.86	5.02	5.06	5.06	5.05	5.12	5.23
		COP	2.45	2.48	2.78	2.88	3.11	3.40	3.56	3.48	3.40	3.62	3.75	3.88	4.19	4.35	4.66
Water temp. outlet55℃	MAX	Heating Capacity（kW）	16.8797	20.8	24.8	27.1735	31.0459	33.1013	35.4864	37.6	38.4	39.7	41.7	43.1	46.5	49.3	54.8
		Input power (kW)	14.3855	15.79	16.87	17.3944	15.5514	16.3365	17.103	16.84	16.75	16.6	16.60	16.59	16.5	16.90	17.5
		COP	1.17	1.3	1.5	1.56	2	2.03	2.07	2.2	2.3	2.39	2.5	2.6	2.81	2.9	3.1
	MIN	Heating Capacity（kW）	8.4	10.2	11.6	12.2	13.9	14.7	15.5	16.0	16.3	16.8	17.6	18.2	19.6	20.8	23.1
		Input power (kW)	4.46	4.92	4.93	4.97	4.47	4.79	5.07	5.09	5.12	5.13	5.17	5.17	5.16	5.27	5.45
		COP	1.88	2.07	2.35	2.46	3.11	3.06	3.05	3.14	3.19	3.28	3.39	3.52	3.80	3.94	4.23
Water temp. outlet60℃	MAX	Heating Capacity（kW）	11.721	17.0	22.2	25.354	26.6	28.5	29.7183	32.4	33.4	35.0179	37.2	38.9	42.8	44.7	49
		Input power (kW)	15.909	16.94	17.58	17.9464	17.53	17.12	16.9145	16.81	16.79	16.716	16.55	16.42	16.1	16.06	15.9
		COP	0.74	1.0	1.3	1.42	1.5	1.7	1.76	1.9	2.0	2.09	2.3	2.4	2.65	2.8	3.06
	MIN	Heating Capacity（kW）	5.9	7.8	10.2	11.2	11.7	12.4	12.7	13.5	13.9	14.5	15.4	16.1	17.7	18.5	20.1
		Input power (kW)	4.73	5.06	5.12	5.08	5.03	5.01	4.99	5.06	5.11	5.15	5.14	5.10	5.02	4.98	4.93
		COP	1.25	1.54	1.99	2.20	2.32	2.47	2.55	2.66	2.72	2.82	2.99	3.15	3.53	3.71	4.07

4.2 Domestic Hot Water Tank

4.2.1 Calculate method

Note: The selection of domestic hot water tank is mainly based on the following three points:

1. Calculate based on the hot water quota for various types of buildings. (The water consumption of domestic hot water is shown in the below table).

2. Calculate according to customer requirements.

3.The capacity of the water tank is determined based on the daily water consumption of each person.

No.	Building type	Unit	Daily hot water consumption of each person(L)
1	Residential equipped with a bathtub	Daily/each person	80～160
	Residential equipped with a shower	Daily/each person	20～60
2	Hotel	Daily/per bed	50~100
3	Hospitals and sanatoriums	Daily/per bed	100~180
4	Public bathrooms and sauna centers	Daily/each person	60～120
5	Foot massage center	Daily/each person	15～25
6	Villa	Daily/each person	70～100
7	Gymnasium	Each person/ every time	30

According to the above standards, **50L hot water /person/day** is taken, and the target water temperature is **55 ℃ for residential buildings.**

4.2.2 Calculation case

For example, if the building area is 400m² and there are 20 persons, the total hot water demand is 1000L per day. The standard heating capacity of PW150 is 40KW in ambient temp 0 ℃. Calculate the time to heat hot water using the following formula:

Q=C×M×△T=4.1868×1000×45=188406KJ=52.3KW

Q：Total heating load kJ

M：daily water consumption (kg or L)

C：Specific heat of water 4.1868kJ/kg·℃

△T：Water temperature difference between inlet and outlet （55-10）℃

Heat Time=Q÷P=52.3÷40≈1.3h

Note: The above calculations are under ideal conditions and are for reference only. In actual use, we should consider the pipeline heat loss, building insulation, changes in environmental temperature conditions, etc., based on the actual heating time.

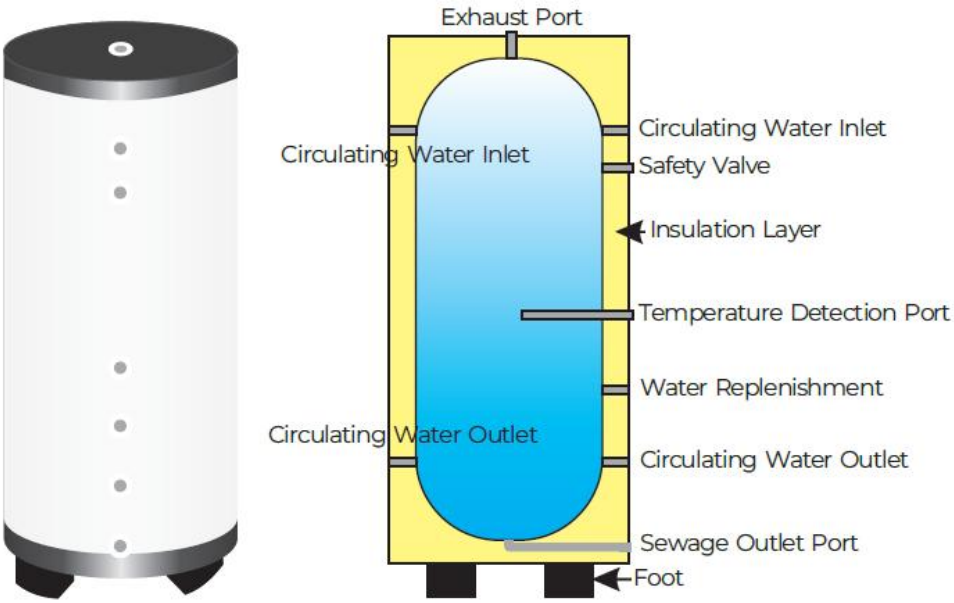

4.3 Circulation Water Pump

Circulating water pump: First, match the flow rate of the water pump, then match the head, and finally determine the power. The water pump should be horizontally installed on the main pipe. On the one hand, it is easy to vacuum, and on the other hand, it can ensure the flow and efficiency of the water pump.

(1) Water pump installed on the return pipe of the heat pump(Optional from factory) (No. 1)

The water flow rate of the circulating water pump is ≥ the rated water flow of the heat pump×(1.1~1.2).

The water head: Hmax1=K(△P1+△P2+△P3)

△P1——Unit water pressure drop head (please check product parameters, usually 1mH2O=10KPa)

△P2——Horizontal pipeline resistance head (usually 5 meters head is required for every 100 meters of pipe length)

△P3——Pipeline height difference(m)

K——Represents a safety factor ranging from 1.1 to 1.2

(2) Water pump installed between the buffer tank and user's device(No. 2)

The water flow rate of the circulating water pump is ≥ the rated water flow of the heat pump×(1.1~1.3).

The water head: Hmax2=K(△P1+△P2)

△P1——Maximum height of the user's end (m, based on the highest point designed by the user)

△P2——The most unfavorable loop pipeline resistance head (m, usually 5 meters of head is required for every 100 meters of pipe length)

K——Represents a safety factor ranging from 1.1 to 1.2

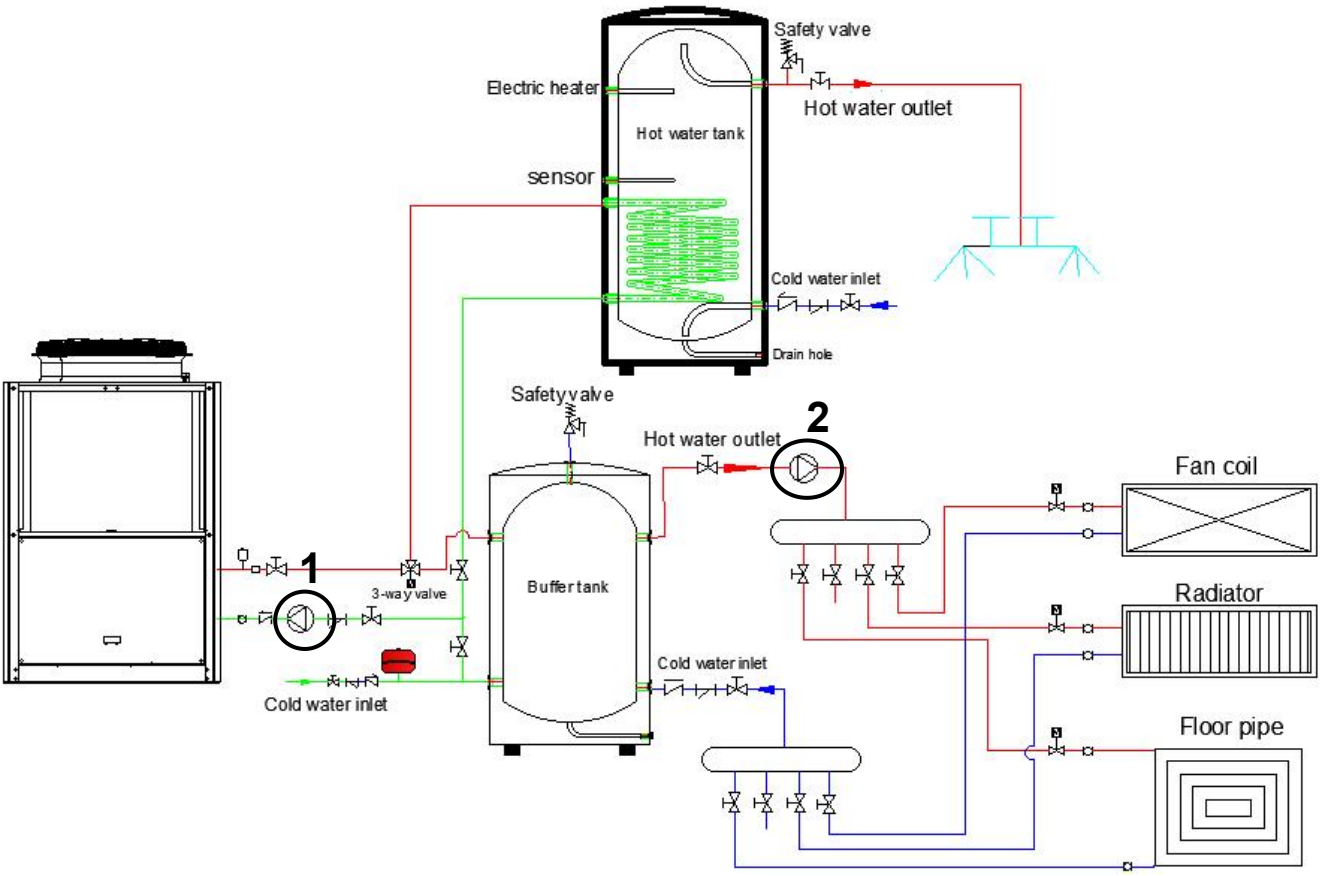

4.4 Buffer Tank

To prevent frequent tripping of the unit due to low load during operation, users must install a buffer water tank. The selection of buffer water tank can refer to the following empirical values.

Model	PW150
Volume of buffer water tank	300-500L

4.5 Air Pressure Tank

Suggest installing an air pressure tank on the water supply pipe to stabilize the pressure.

(1) Basic requirement: Rust proof and suitable for water/ethylene glycol (up to 30%) solution.

(2) It is best to choose 304 stainless steel flange air pressure tanks, as carbon steel galvanized is more prone to rusting.

(3) The pre-filling pressure of the expansion tank is equal to the set pressure of the water replenishment valve.

(4) It is recommended to check the inflation pressure of the expansion tank every 1-2 years.

The following table shows the recommended selection values:

Model	**Capacity(KW)**	**Volume(L)**	**Air pressure tank**
PW150	45~70	19	

4.6 Three Way Valve

Basic requirements: Made of brass, stainless steel, or plastic, and suitable for water/ethylene glycol (up to 30%) solution. Selection suggestion:

Wiring method: three wire with two control or three wire with one control

Drive voltage: AC220V

Action time: 15 seconds

Remark: The heat pump has designed two types of three-way valve wiring ports, three way valve 1 and three way valve 2. For detailed wiring, please refer to **section 6.2- Three way valve wiring.**

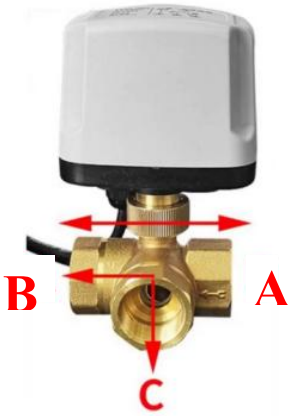

A port: Connect to the outlet water pipe of heat pump

B port: Connect to the inlet water pipe of buffer tank

C port: Connect to the inlet water pipe of DHW tank

4.7 Safety Valve

The safety valve is generally installed at the return end of the heat pump system.

Basic requirements: The material should be brass or stainless steel, and suitable for water/ethylene glycol (up to 30%) solution.

Suggestion: The safety valve plays a safety protection role in the system. When the system pressure exceeds the specified value, the safety valve opens to discharge a portion of the hot water from the system, ensuring that the system pressure does not exceed the allowable value, thereby ensuring that accidents do not occur due to excessive pressure. The set pressure (take off pressure) of the safety valve is consistent with the maximum working pressure of the system.

Remark: The working pressure of the safety valve built-in in the unit is **3Bar**.

4.8 Exhaust Valve

During the operation of a heat pump system, the gas released by water during heating, such as oxygen, can cause numerous adverse effects that can damage the system and reduce thermal effects. If these gases cannot be discharged in a timely manner, it can lead to many adverse consequences.

Basic requirements: The material should be brass or stainless steel, and suitable for water/ethylene glycol (up to 30%) solution. Installing exhaust valves is crucial for system safety and stability.

Exhaust valve

Suggest installing exhaust valves at the highest point of the system to ensure stable operation.

4.9 Water Filter

1. When the water quality is poor, more sediment such as scale and sand will be generated. Therefore, water must be filtered and softened with a soft water device before flowing into the water system;

2. Before using the unit, the water quality should be analyzed, such as pH value, conductivity, chloride ion , Sulfate concentration, etc. The following are the water quality standards applicable to this unit.

Item	Unit	Standard requirements
PH Value		7.5~9.0
Chloride ion	mg/L	≤50
Sulfate	ppm	≤50
Total hardness	mg/L	≤200

3. The return water main pipe must be equipped with a system filter to keep the water quality, and ensure that the direction indicated by the filter arrow is consistent with the direction of the water flow inside the pipe. Sufficient maintenance space must be reserved around the filter.

Selection: The function of the filter is to collect materials in the system and avoid materials affecting the normal operation of the system. The larger the mesh size of the filter, the finer the particle size of the material. The smaller the mesh size, the larger the particle size of the material. The diameter of the filter

should be consistent with or one specification larger than the outer diameter of the main water supply pipeline in the system.

Installation: When installing the filter, it is necessary to choose a suitable position, and **the water flow direction of the system must be consistent with the arrow direction on the filter.** For filters with a drain valve, the drain valve must be facing downwards. Incorrect installation may result in the inability to discharge garbage from the filter screen through the drain valve. Prolonged retention of garbage in the filter screen will reduce the effective area of the filter, increase the water resistance generated by the filter, and reduce the water flow rate of the system.

Y filter

4.10 Water replenishment valve

Basic requirements: The material should be brass or stainless steel, and also suitable for water/ethylene glycol (up to 30%) solution.

General specifications: The water replenishment pressure should not be lower than the minimum pressure required by the system; And water pressure of tap water should be ≥ 0.2MPa.

The water replenishment valve is equipped with an automatic control device, which can automatically adjust the opening and closing of the water replenishment valve according to the actual situation of the system.

4.11 Waterway antifreeze protection

Ice formation can cause damage to the whole system. Due to the possibility of outdoor units being exposed to environments below 0℃, caution must be taken to prevent the system from freezing. In the event of a power failure, the device's own antifreeze protection function will fail. Due to the possibility of power outages when left unattended, it’s recommended to use antifreeze in the water system.

The following parameters for ethylene glycol and propylene glycol antifreeze are for reference only.

Ethylene glycol concentration (%)	Correction factor				Freezing point(℃)
	Cooling capacity	Power input	Water resistance	Water flow	
0	1.000	1.000	1.000	1.000	0
10	0.984	0.998	1.118	1.019	-4
20	0.973	0.995	1.268	1.051	-9
30	0.965	0.992	1.482	1.092	-16

Propylene glycol concentration (%)	Correction factor				Freezing point(°C)
	Cooling capacity	Power input	Water resistance	Water flow	
0	1.000	1.000	1.000	1.000	0
10	0.976	0.996	1.071	1.000	-3
20	0.961	0.992	1.189	1.016	-7
30	0.948	0.988	1.380	1.034	-13

Caution:

1.Water treatment is carried out correctly by qualified water experts.

2. Choose ethylene glycol containing corrosion inhibitors to counteract the acid formed by ethylene glycol oxidation.

3. If a household hot water tank is installed, only **propylene glycol is allowed to be used**. In other devices, ethylene glycol can also be used.

4. Do not use automotive ethylene glycol as their corrosion inhibitors have limited lifespan and contain silicates, which can contaminate or clog the system;

5. **Galvanized pipes are not used in ethylene glycol** systems as they may cause precipitation of certain elements in ethylene glycol corrosion inhibitors;

6. Ensure that ethylene glycol is compatible with the materials used in the system.

5.Installation

5.1 Installation method (Heating, Cooling and Domestic hot water)

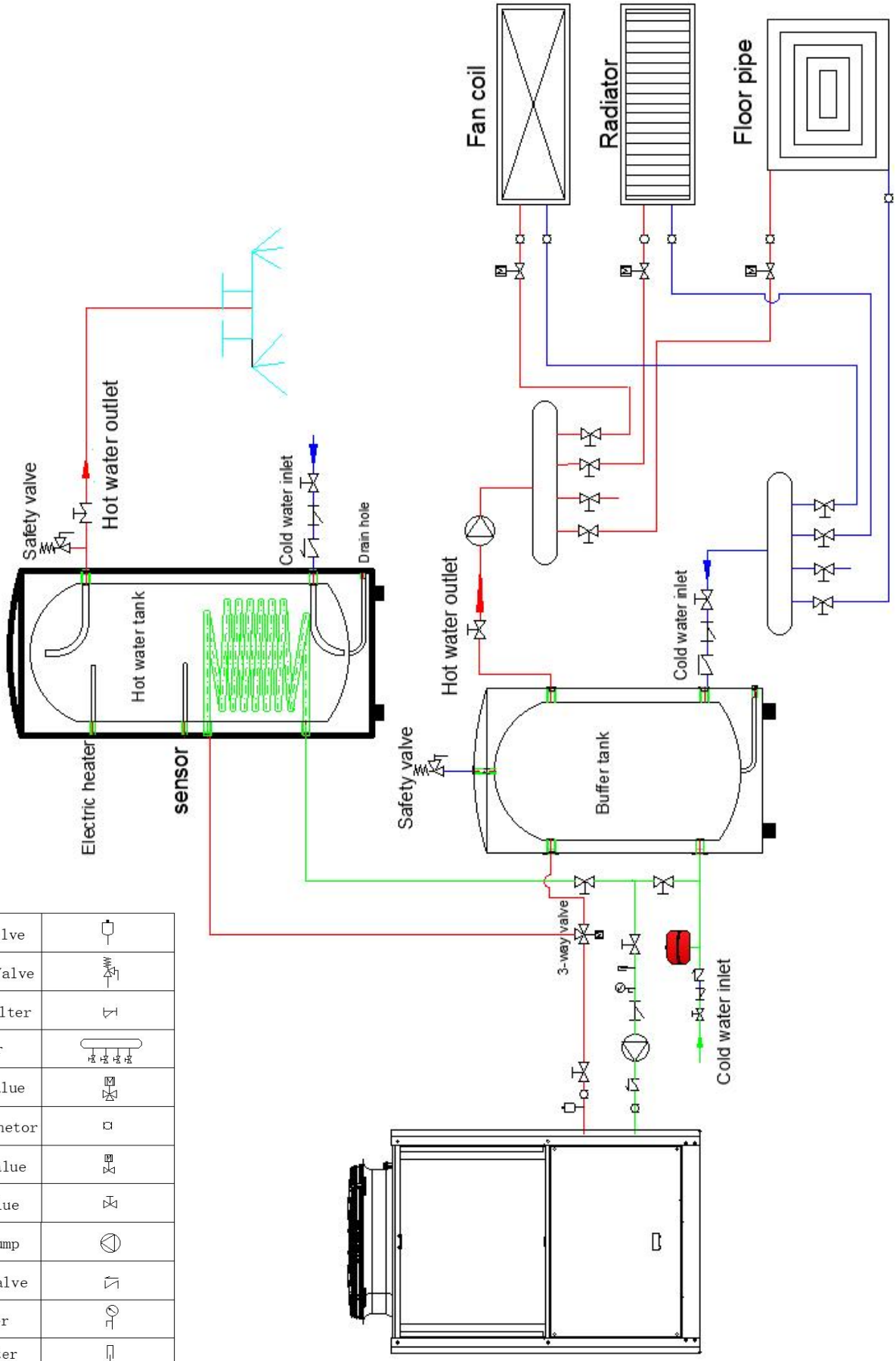

Exhaust valve	
Safety Valve	
Y type filter	
Diverter	
3-way Value	
Rubber Connetor	
2-way Value	
Ball Value	
Water pump	
Check valve	
Manometer	
Thermometer	

5.2 Preparation work and precautions before installation

5.2.1 Product installation instructions and special precautions

A. the heat pump heating and hot water system should be a closed-loop system, if using antifreeze liquid or other liquid, please consult to Manufacture;

B. Filter must be installed before the inlet pipe of the heat pump unit, and the number of filter mesh is above 40;

C. The filter mesh in the filter must be made of stainless steel to avoid scratches on the system caused by impurities in the filter

The heat pump uses the non-toxic micro-combustion refrigerant R290:

1) Lower limit of ignition [LFL% (V / V)]: 2.1 vo1%; 0.038 kg / m^3

2) Automatic ignition temperature, refrigerant ignition point AIT: 470℃

3) Minimum ignition energy MIE: 0.31 mJ

4) Combustion speed BV: 46 cm / s

5) Combustion heat HOC: 50.3 MJ / kg

6) Occupational contact limit OEL: 1000 PPMv

7) Safety level (ASHRA34): A3

Confirm the critical concentration and take necessary measures by following the steps below

Calculate total refrigerant volume (A [M load 3]) 22 refrigerant volume + additional addition.

. Calculate the indoor volume (B [m3]) (as the minimum volume)

. Calculate the refrigerant concentration. Prevent excessive concentrations.[A /（A+B）]<14.4%

. Install a ventilator to reduce the refrigerant concentration to a critical level.

. If long-term ventilation is impossible, please install a leakage alarm device associated with the ventilator.

5.2.2 Disclaimer instruction

1. The product shall be supplied independently by copper core power wire that meets the required wire diameter, and the unit shall have reliable grounding wire; if the wiring does not meet the requirements, the company shall not be responsible accordingly.

2. When cleaning the unit, cut off the power switch. If the unit is cleaned under electric operation, resulting in electric shock and personal safety injury.the company shall not be responsible for this.

3. In winter or when the ambient temperature is below 2℃, if the water is not used for a long time, please be sure to empty the water in the waterway and the water tank to prevent the water from freezing and expanding, which results in freezing of the water pipe and the water tank, damaging the machine. If the unit stops the anti-freezing protection due to the power failure, the company shall not be responsible for it.

Warning

1. Before installation, it shall be confirmed that the voltage of the power grid is consistent with the required voltage of the unit, and whether the open load capacity of the wires and sockets meets the maximum power requirements.

2. If the standing appliance is not equipped with power cord and plug, and there is no other device that disconnected the power supply (the contact distance is fully disconnected under the overvoltage level), the fixed wiring must be connected with the full pole disconnected leakage protection device with the contact distance greater than 3mm according to the wiring rules.

3. Please entrust the dealer or professional personnel to install; the DIY installation shall have relevant professional knowledge, otherwise may cause water leakage, fire, electric shock, or injury.

4. The auxiliary products purchased locally must use the products designated by the company;

5. Please follow the regulations of the local electrical company; confirm whether the grounding is correct. If the grounding is not perfect, it may cause electric shock.

6. When the heat pump unit needs to be moved or reinstalled, please entrust the dealer or professionals to operate; if the installation is not perfect, it may cause the unit operation failure, electric shock, fire, injury, water leakage and other accidents.

7, must not transform and repair, improper repair, will cause water leakage, fire, electric shock, injury and other accidents, be sure to entrust dealers or professional personnel to repair.

8. Do not remove any permanent instructions, labels or nameplates on the inside of the heat pump unit shell or the various panels.

5.2.3 Precautions

1, the power supply wiring must be equipped with a leakage protector with a rated current value not lower than the high operating current of the unit,, and the grounding must be reliable, and keep dry to prevent leakage. Please often check whether the wiring is well coordinated. If the contact is bad, it will lead to overheating and burn out the devices, and even cause fire and other personal injury accidents;

2. In the place and wall where the water may splash, the installation height of the power socket should not be less than 1.8 meters, and ensure that the water will not splash on the socket, and can not be installed in the place where children may touch;

3, during the power heating period, the pressure safety valve relief hole may have water drops, this is a normal phenomenon, if a lot of leakage, please timely find professional personnel to repair, do not plug the relief hole, so as not to cause heat pump unit damage, leading to the occurrence of safety accidents. The drainage pipe connected to the pressure relief hole shall be kept tilted downward and installed in a frost-free environment;

4. If the unit is equipped with power cord, when the power cord is damaged, the special power cord provided by the manufacturer must be used, and replaced by the service organization of the manufacturer or similar

qualified professional repair personnel;

5. If the parts of the unit are damaged, please hand them over to the professional personnel for maintenance, and use the special maintenance parts provided by the company;

6. If the heat pump unit will not be used for a long time (more than 2 weeks), hot water pipe system may produce hydrogen, which is easily burning. In this case, in order to reduce the danger, it is recommended before using any electrical appliances connected with the hot water system, turn on the hot water faucet for a few minutes (such as 5~10 minutes). If there is hydrogen, then when the water begin to flow, there will be an abnormal sound like the air through the pipe. Do not smoke or light an open flame near the tap during the opening period.

7. Do not put your fingers, sticks into the air outlet or air inlet. Because the internal wind wheel runs at a high speed, it may lead to injury.

8. In case of abnormal situation (empyreumatic odour), immediately cut off the manual power switch, stop running, and contact the after-sales service department of the manufacturer. If the abnormal operation continues, it may cause an electric shock or cause a fire.

9. The unit can not be installed in a place where combustible gas is easy to leak. Once the combustible gas leaks, a fire may be caused around the unit.

10. Confirm whether the installation foundation for long-term use is firm. If the foundation is not solid, there may be a fall injury accident.

5.2.4 Required tools

No.	Tool Name	Picture	Function
0	Safety and industrial gloves		Protect your hands
1	Digital electric pen		Preliminary maintenance voltage, small one-word screw
2	Cross screwdriver (5 * 150)		Remove the crucifix screw
3	One-word screwdriver (5 * 150)		Remove one-word screw

4	Active wrench (10-inch)		Remove screws and so on
5	Active wrench (14-inch)		Remove the pipe valve, etc
6	Laryngeal forceps (20 inches)		Remove the pipe valve, etc
7	Long-nose pliers		Line cutting, terminal removal, etc
8	Hex wrench 4~12mm		Open the stop valve, valve, etc
9	Electric screw driver		Remove screws, etc

10	Clamp meter multi-meter		Test current, voltage, resistance, capacitance, etc
11	Vacuum pump		Vacuum of the refrigeration system
12	High and low pressure gauge refrigerant tube		Measure the refrigeration system pressure, vacuum, etc
13	Scissors		Cut strapping, thermal insulation cotton, etc
14	Band tape		Measure the distance, the length, etc

15	Marker pen		Record the data, mark, etc

Note: Other special tools are not listed, and the above tools can guarantee the basic maintenance and testing, etc.

⚠ The product shall be installed by the professional installation personnel according to the instructions.

Note: Correct installation is required to ensure safe operation. The requirements for the heat pump include:

1. Dimensions of the key connections.
2. Site assembly (if required).
3. Appropriate site location and clearance.
4. Proper electrical wiring.
5. Adequate water.

This manual provides the information required to meet these requirements. Before proceeding with the installation, thoroughly check all the pre-installation preparations and review the installation steps.

5.3 Installation position

1. Do not install the heat pump near the dangerous material and location.
2. Do not install the heat pump under a deep sloping roof without a drain, which forces the rain and debris to pass through the unit.
3. Place the heat pump on a slightly tilted flat surface, such as concrete or precast slab. This would allow proper drainage of condensed water and rainwater from the unit base. If possible, the floor shall be placed on the same or slightly above the level of the filtration system / equipment.
4. The installation position, spacing and ventilation shall meet the technical requirements of the heat pump unit manufacturer.
5. Avoid flammable gas leakage or environments with highly corrosive gases.
6. Intelligent control components of the electrical system and the system shall avoid being directly affected by strong electric and magnetic fields.
7. To facilitate maintenance and troubleshooting, there are(is) no obstacles within the vertical distance of 2 meters from the unit for convenient ventilation.
8. Keep away from densely populated areas, avoid areas prone to noise and vibration, and take noise reduction measures if necessary.
9. Unfavorable natural conditions (such as heavy oil smoke, strong sandstorms and serious lampblack pollution) should be avoided.
10. Safety warning signs shall be set up at the installation position.
11. The installation position shall be convenient for the water supply pipe and the electrical connection.
12. Give full consideration to the requirements of fire fighting, ventilation and drainage to facilitate maintenance and repair.
13. Equipped with qualified power supply matching with the equipment to be installed. The power supply should be dedicated, with sufficient capacity and reliable grounding.
14. The foundation or foundation of the installation site shall be solid, with sufficient bearing capacity, and the hollow structure or buried drainage ditch shall be adopted.

Isolation measures shall be added at the connection between the heat pump and the foundation. The process, use requirements, noise vibration amplitude, frequency characteristics, transmission mode, noise and vibration of the isolation measures shall meet the design requirements.

15. When the unit is installed on the roof or in the outdoor area, the lightning protection measures should be added.

5.4 Installation details

All of the criteria given in the following sections reflect the minimum clearance. However, each installation must also be evaluated, taking into account local prevailing conditions such as proximity and height of walls, and proximity to public access areas. The heat pump must be placed in all aspects to provide clearance for maintenance and inspection.

1.The heat pump installation area must have good ventilation, and shall not hinder the inlet and air outlet.

2.The installation area must have a good drainage system and have a solid foundation.

3.Do not install the unit in areas with corrosive gases (chlorine or acid), dust, sand and leaves.

4.For easier and better maintenance and troubleshooting. For easier and better maintenance and troubleshooting, no obstacles around the unit should be closer than 1m. No obstacles within 2 meters vertical from the ventilation device.(See Figure 1)

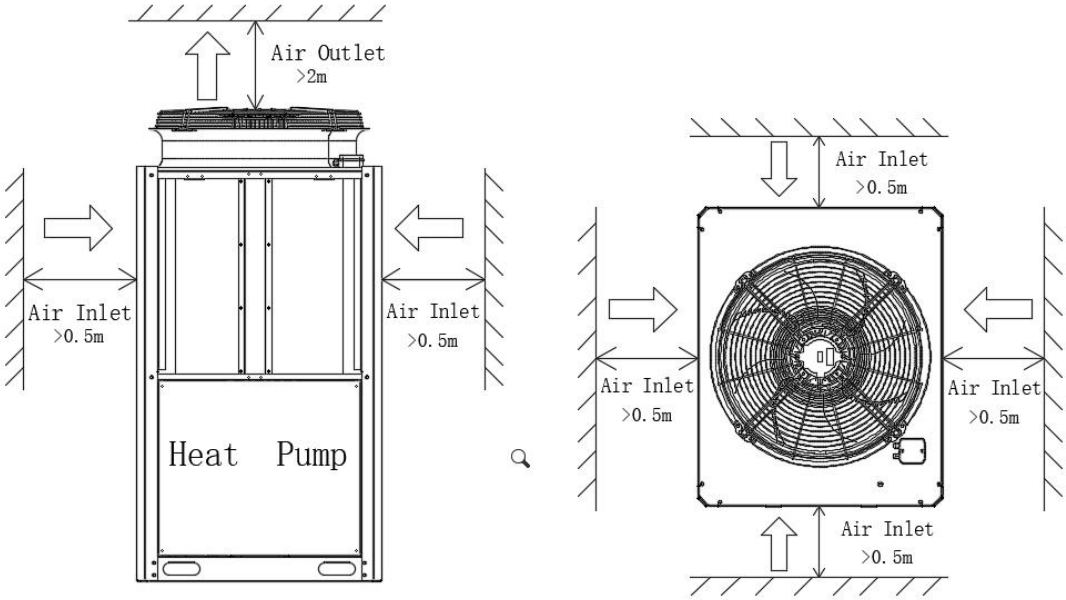

Fig 1

5.Heat pumps must be fitted with shock-proof bushing to prevent vibration and / or imbalance.

6.Even if the controller is waterproof, avoid direct sunlight and high temperatures. In addition, the heat pump should be placed in an easy observation position to ensure that the use status of the wire controller can be viewed at any time.

7.Pipes must be fitted with proper supports to prevent possible damage caused by vibration. And tap water pressure shall be kept above 196 kpa. Otherwise, the booster pump shall be installed.

8.The acceptable operating voltage range shall be within ± 10% of the rated voltage.

9.To ensure safety, the heat pump unit must be grounded.

10.Heat pumps must be fitted with shock-proof bushing to prevent vibration and / or imbalance.

11.The installation position meets the fire protection requirements; The width of the main operating channel of the heat pump unit is 1.0-1.2m, and the width of the non main channel is not less than 0.8m. The distance between the outer contour of the equipment and the switch gear or other electrical devices is 1.0m;

12.When installing adjacent units, the distance between the two units should be maintained at 1.0~1.2m.

13. The heat pump and buffer tank, as well as the domestic hot water tank, should be located as close as possible to reduce heat loss.

14.If the unit does not operate in winter, the internal water of the system must be drained to prevent pipeline or component damage from freezing.

5.4.1 General requirements

① Read the operating instructions before installation, use, and maintenance.

② The heat pump must be installed by a professional in accordance with the local electrical wiring specifications and this specification.

③ Before installation, please contact the local dealer center and check the complete packing before installation.

④ Do not use any method to accelerate the defrosting process or clean the cream(frost) unless specifically advised by the professional.

⑤ When repairs are needed, please contact the nearby after-sales service center.

⑥ The operation manual provided by the manufacturer must be strictly followed. Non-professional maintenance is prohibited.

⑦ The equipment shall be stored in a room without continuous fire source (e. g., open fire, illuminated gas furnace, open electric heater).

⑧ The storage environment of the equipment shall be kept ventilated to avoid direct sunlight.

⑨ Safety checks must be performed to minimize the hazard risk prior to maintenance or repairing the R290 heat pump.

5.4.2 Open the package and check it

① The heat pump should be checked in a well-ventilated area (open doors and Windows). Fire source is strictly prohibited.

② Before opening the cabinet, check whether the pressure value of the heat pump is in the below range and judge whether the refrigerant is leaking. If leakage is found, do not install a the heat pump.

Reference value: R290 ambient temperature -20~35℃
Corresponding to saturation pressure 0.2～1.2MPa

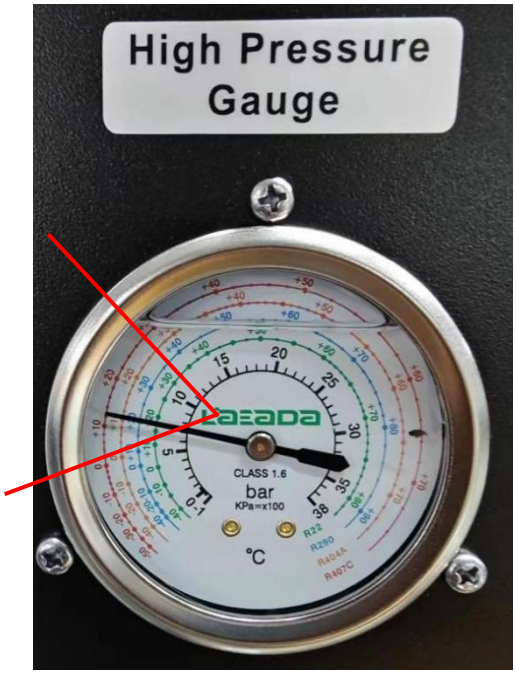

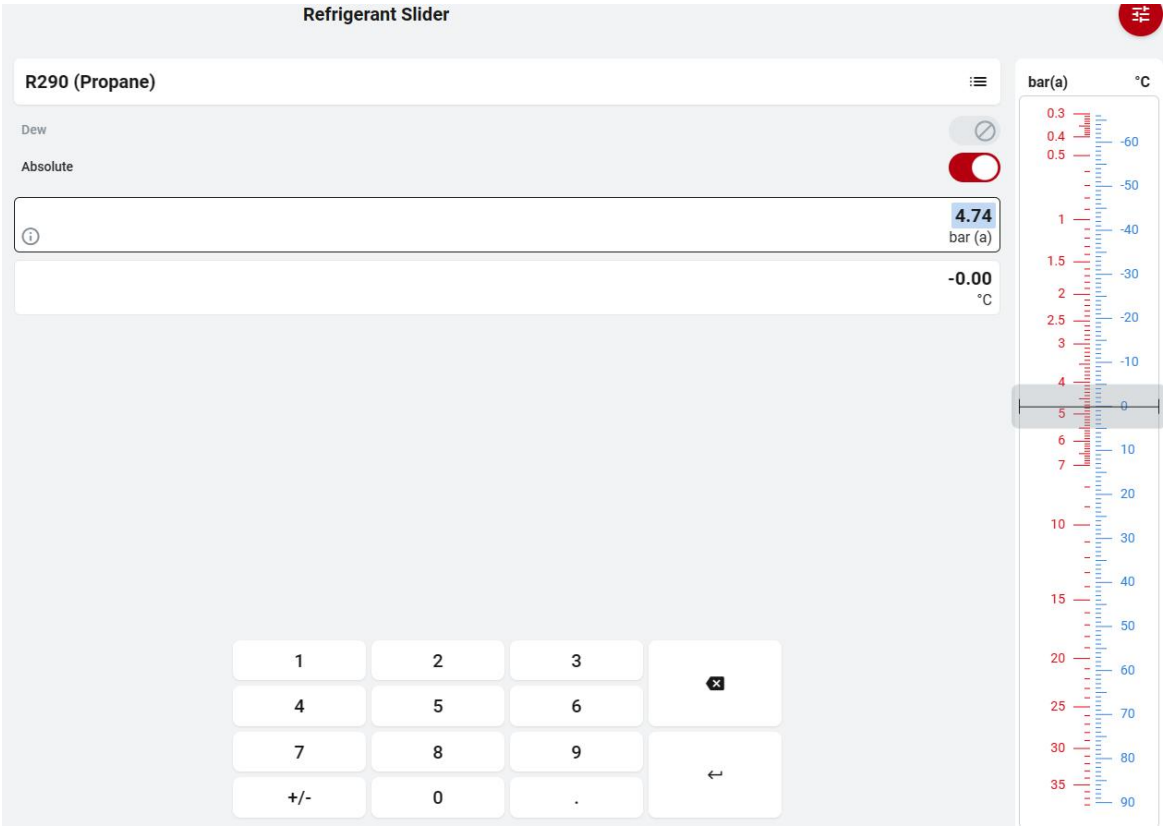

③ The heat pump shall be checked for trace of damage and for good appearance.

5.4.3 Safety principles for heat pump installation

① The installation site shall be well ventilated (open doors and windows).

② The use of R290 refrigerant is prohibited in areas where fire sources exist.

③ When installing the heat pump, anti-static measures should be taken, such as wearing cotton clothes / anti-static clothes, wearing cotton gloves, wearing wireless electrostatic bracelet, etc.

④ The leak detector must be in working condition.

⑤ If R290 refrigerant leakage is found during the installation process, it should immediately test the concentration of the indoor side environment, and open the doors and Windows for ventilation until the safety level is reached. If the refrigerant leakage affects the performance of the heat pump, the operation should be stopped immediately, and the heat pump must be returned to the service station for treatment.

⑥ The installation position of the heat pump should be easy for installation and maintenance, no obstacles around the inlet and exit of the unit, and not close to the heat source.

⑦ Do not be installed in a flammable and explosive environment.

⑧ When the heat pump is installed or repaired, when the length of the power line and the indoor and outdoor machine connection line is not enough, it must be replaced according to the original specifications. The connection and extension are strictly prohibited.

5.5 Sitting the Heat Pump

1. The heat pump should be firmly fixed to a base, preferably a concrete base.
2. The installation height should be ≥300mm.(It's up to the drain height and the snow height in local). There are a total of 8 fixed holes reserved on the 4 sides of the heat pump chassis(Circled in red below), and the customer needs to use M8 bolts to fix unit to the installation base.

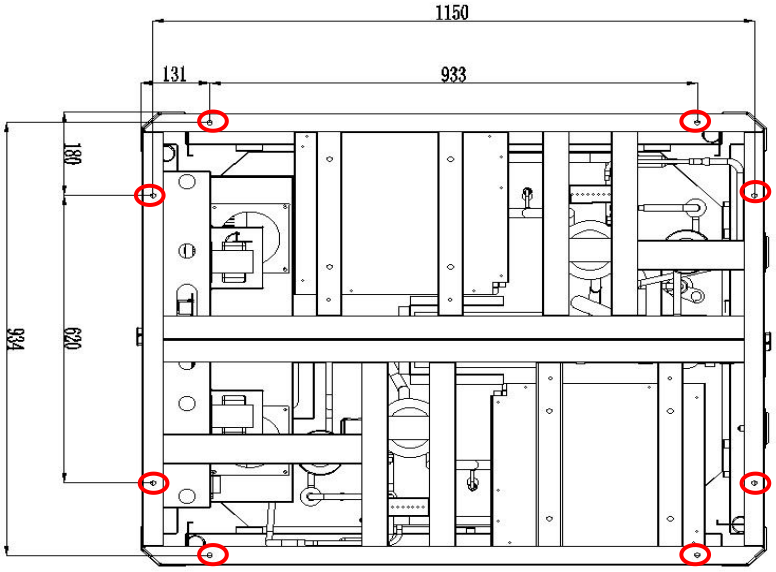

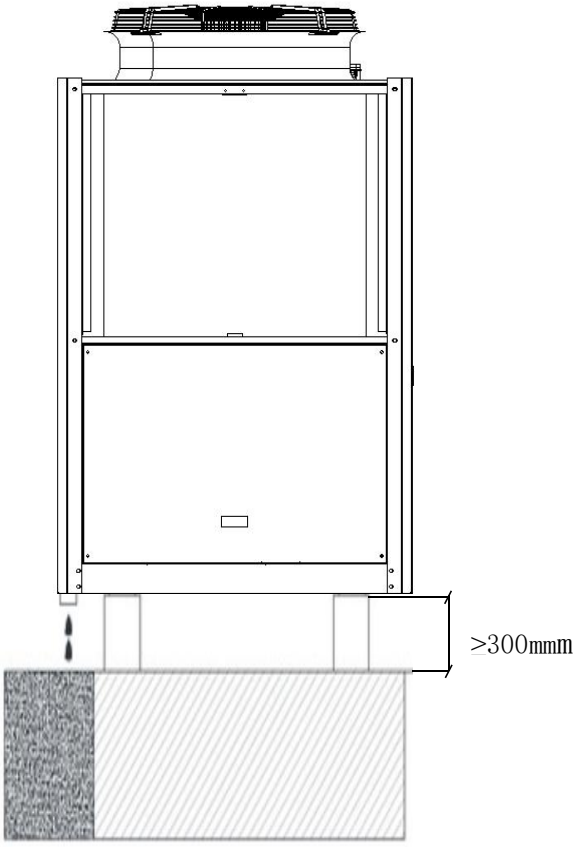

Remark: In areas with severe ice and snow, the installation height should be greater than 500mm.(It's up to the drain height and the snow height in local).

5.6 Drainage and Condensation

1. Condensation will occur from the evaporator when the unit is running and drain at a steady rate, depending upon ambient air temp. and humidity. The more humid the ambient conditions, the more condensation will occur. The bottom of the unit acts as a tray to catch rainwater and condensation. 2. Keep the drain holes, located on the bottom pan of the unit base, clear from debris at all times.
3. The chassis is designed with 4 drainage holes(Circled in purple below), which can directly drain condensate water and prevent water accumulation from causing freezing.
4. Preferably install the device in a well-drained place. To do this, it is advisable to provide a bed of gravel, sand or similar materials below said hole. If the drain hole of the heat pump is covered by a mounting base or by the floor, lift the unit to leave a free space of at least 100mm below it.
5. If it is installed on a terrace or facade, the condensate outlet must be led to a drain to avoid inconvenience and/or damage caused by the dripping of condensate water. If the installation is carried out in a region where the temperature can be below 0°C for a long period of time, do not connect the drainage outlet to the centralized water pipe, but directly drain to prevent the water pipe from freezing.

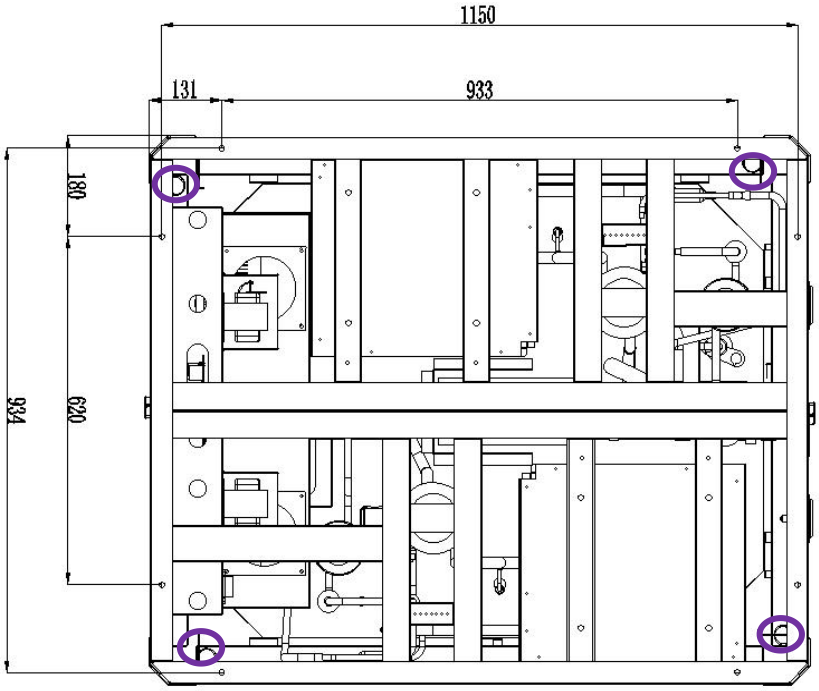

5.7 Water system connection

It is recommended to install quick connection joints at the inlet and outlet connections. Steel and copper joints are recommended for the inlet and outlet joints of the heat pump. Heat pump piping recommends using stainless steel or PPR piping.

⚠ Note-Ensure that flow requirements and water supply pressure can be maintained shall be 0.15~0.8MPa.

5.7.1 Requirements for pipeline installation

1. It is recommended to install quick connect fittings at the connection between the inlet and outlet.
2. Suggest using stainless steel or PPR pipes for water pipelines.

3. When water pressure exceeds 0.8MPA, please use reducing valve to reduce the water pressure below 0.8MPA.

4. Each part connected to unit needs to be connected with method of loose joint and installed with intermediate valve.

5. Ensure that all pipe has been properly completed and then proceed to do a water leakage and pressure test.

6. All the pipelines and pipe fittings must be insulated to prevent heat loss.

7. Install a **drain valve** at the lowest point of the system to enable the system to be drained during freezing conditions.

8. Install a **check valve** on the water outlet connection in order to prevent back siphoning when water pump stops.

Drain valve

Check valve

9. In order to reduce the back pressure, the pipes should be installed horizontally.

10. Minimize the elbows (90 degrees connections). If a higher flow rate is required, install a bypass valve.

11. An exhaust valve must be installed at the highest point of the circulating water system, and also at locally elevated areas.

5.7.2 Main parts installation

Please refer to **Part 4-Selection** for the selection and installation of key components.

5.7.3 Water pipe diameter

Model	Water pipe diameter	Material
PW150	G1.5"	Copper or Stainless steel or PPR/PVC pipes

1) The pipe must be flushed before the heat pump is connected, so that any contaminants do not damage the components parts.

2) The heating/cooling water inlet and outlet direction must be connected according to the section **5.1 Installation diagram.**

3) A flexible damping pipe must be installed between the heat pump and the buffer tank to balance the height difference between the machine and the pipe and reduce the transmission of vibration.

5.7.4 Water supply and pipeline emptying steps

1. Open the exhaust valve and all valves on the water distributor first for exhaust;
2. Make up water at the pipeline filling port(**Water pressure of tap water ≥ 0.2MPa**);
3. During the water replenishment process, it is necessary to observe whether there is water overflow from the exhaust valve and drainage valve. If there is water overflow, it indicates that the system has been filled with water;
4. Close the exhaust valve and then take a look at the water pressure gauge. If the pointer is greater than 0.2MPa, close the makeup valve and the water pipeline already be emptied successfully.

Note: The water system pressure of the heat pump **design is 0.8MPA**.

Water pressure gauge

5.6.5 Water pressure debugging

1.Before the experiment, the pipeline should be fixed, the joints should be exposed, and water distribution equipment should not be connected;
2. The pressure gauge is installed at the lowest point of the test pipe section, with a pressure accuracy of 0.01Mpa;
3. Slowly fill the pipeline with water from the lowest point of the pipe section, fully eliminate the air inside the pipeline, and conduct a water tightness test;
4. Slowly increase the pressure of the pipeline, and it is recommended to use a manual pump for pressure increase. The pressure increase time should not be less than 10 minutes;
5. After boosting to the specified test pressure and stabilizing for 1 hour, the pressure drop shall not exceed 0.06Mpa;
6. Under 1.15 times the working pressure, after stabilizing for 2 hours, the pressure drop should not exceed 0.03Mpa;
7. During the test, there should be no leakage at each connection;
8. Allow two additional pressures within 30 minutes to increase to the specified test pressure.

5.6.6 Pipe insulation requirements

1. All hot water pipelines must be wrapped with insulation materials;
2. Wrap the insulation pipe flat on the hot water pipeline and wrap the tie wrap around it;
3. Wrap the insulation skin material (such as thin aluminum plate, aluminum foil, etc.) flat on the pipeline that has already been wrapped with the insulation pipe;
4. The wall thickness of the insulation pipe should be reasonably selected based on the local climate, and insulation cotton thickness should be ≥ 20mm; Finally, wrap a layer of wrapping tape on the insulation cotton.

5.8 General Operating Guide

Initial start-up of the precautions

First bootstrap and run status checks

1. Ensure that the power supply is the same as the product nameplate.
2. Electrical connection of the unit: check whether the power line track and connection are normal; check whether the water pump and other chain devices are correct
3. Water pipe: the water pipe must be cleaned two or three times to ensure clean and pollution-free
4. Check the water system: if the water is sufficient and there is no air, ensure that there is no leakage
5. Start the strap for the first time or again after a long stop to ensure early power on and heat the crankcase for at least 12 hours (local loop temperature. For zero). The pump starts first for a period of time, the fan starts, the compressor starts, and the unit works normally.
6. Operation inspection (check the unit operation according to the following data)

   After the normal operation of the unit, check the following items:

   a. Input and output water temperature.

   b. The circulating flow on the side

   c. Operating current of the compressor and the fan

   d. High and low pressure values during heating operation.

⚠ Warning: Warning: Do not use this heat pump if any electrical components are in contact with the water. Immediately contact professional maintenance technicians to check the heat pump.

⚠ Note: Keep no other objects around the heat pump blocked. Blocking the airflow may damage the unit and may void the warranty period.

5.8 The User's Guide

5.8.1, rights and responsibilities

(1) To ensure that you get the service during the guarantee period, only professional service personnel and technical personnel can install and maintain the equipment. If you breach this requirement, and cause any loss and damage, we will not bear any responsibility.

(2) After receiving the unit, check whether the shipment is damaged and all parts are complete; if there is any damage or defect, please notify the dealer in writing.

5.8.2 User Guide

2.1 All safety protection devices are set in the unit before leaving the factory. Do not adjust them by yourself.

2.2 The unit has enough refrigerant and lubricating oil, and do not fill or replace. If leakage, refer to the number of nameplates (if filling refrigerant, filling refrigerant after vacuum).

2.3 The external water pump must be connected with the unit information, otherwise it is easy to display various water shortage alarms.

2.4 Clean the clean water system regularly according to the maintenance requirements.

2.5 When the ambient temperature less than zero in the winter, attention should be paid to the antifreeze.

2.6 Safety precautions

A users cannot install the unit by themselves, but must contact the agent or professional installation company for installation, otherwise it may cause safety accidents and affect the use effect.

B When installing or using the unit, please check whether the power supply corresponds to the unit power supply.

C The main power switch of unit shall be installed with leakage protector, and the power cord must meet the power requirements of the unit, national standards and local fire safety regulations.

D Unit must have grounding wire; do not use without grounding wire; never connect grounding wire to zero line or water pump.

E The main power switch of unit shall be set 1.4 meters higher (children do not touch) to prevent children from playing and causing danger.

F Hot water with exceeding 52℃ can cause damage and must be mixed with hot / cold water and then used.

G When the unit is soaking, please contact the factory or the maintenance department, which can be used again after maintenance.

H Do not insert any tool into the fan fence of the device. The fan is dangerous.(Special Care Center for Children), If you need to close the fan fence, do not use this device.

J To avoid electric shock or cause fire, do not store or use fixtures, paint, gasoline or liquids around the heat pump; do not throw water or other liquids on the device, and do not contact the heat pump with wet hands.

K Do not adjust switches, valves, controllers and internal data except for professional service personnel or authorized personnel.

L If the safety is starts frequently, contact the factory or local dealer.

6.Electrical connection

6.1 Notes for electrical wiring

Ensure that all the high voltage circuits are disconnected before you start installing the heat pump. Contact with these circuits may cause death or serious injury to the user, installer or other person, or property damage.

When repairing the heat pump, mark them before breaking the wires. Wiring failure may lead to improper and dangerous operations. After the maintenance is complete, check and ensure the normal operation.

Warning: Risk of electric or electric shock.

Ensure that all high voltage circuits are disconnected before starting the heat pump. Contact with these circuits may cause death or serious injury to the user, installer, or other person, or may cause property damage.

Note: Before before the heat pump. Wiring failure may lead to improper and dangerous operations. After the maintenance, check and ensure the normal operation.

6.2 Electrical wiring

1. If the power supply voltage is too low or too high, it may cause damage and / or cause instability Operation of the heat pump unit because of the high rush current when starting.

2. The minimum starting voltage shall be greater than 90% of the rated voltage. Acceptable operations The voltage range shall be within ± 10% of the rated voltage.

3. Ensure that the cable specifications meet the correct requirements for the specific installation.this one The distance between the installation site and the mains power supply will affect the cable thickness. Select cables, circuit breakers, and isolation circuit breakers according to local electrical standards.

6.2.1 Ground protection and over-current protection

To prevent electric shock during unit leakage, heat pumps shall be installed according to local electrical standards.

1. Do not interrupt the power supply of the heat pump frequently, otherwise it may shorten the expected life of the heat pump.

2. When installing the over-current protection, ensure that the correct current rating is met Specific installation

3. The compressor, fan and water pump are equipped with relay protection. Therefore, during the installation and debugging process, the current of the above components is first measured to be within the current protection range. If the heat pump controller requires additional control of the secondary heater, the relay secondary heater (or power supply) must be connected to the relevant output of the controller.

6.2.2 Three-phase power supply wiring

Use 5-core power cables of appropriate length according to local safety regulations and connect them to the junction box of the unit.

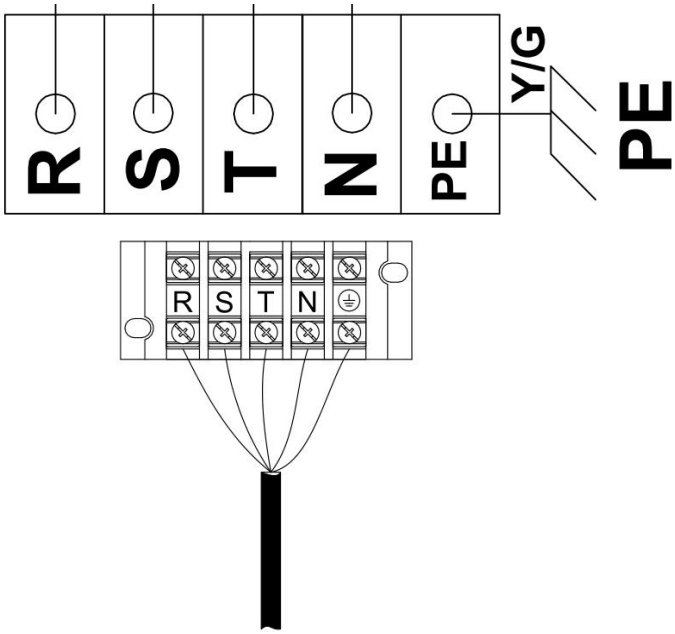

Three-phase power input

Power supply: Ensure the cable specifications meet the correct requirements for the specific installation.The distance between the installation site and mains power supply will affect the cable thickness. Follow the local electrical standards to select the cables, circuit breakers and isolation breakers.

Model	Power supply	Max. current (A)	Fuse/circuit breaker (A)	Wire diameter
PW150-DKZLRS-E	380V/3Ph/50-60Hz	30	40	10mm²

6.2.3 Wiring of the water tank heater

Use 2-core power cables (1.0mm² 2) according to local safety regulations. The electric heating line of the water tank is 220V signal line, and the electric heating power exceeds 1 KW. External using appropriate relay or contactor connections.

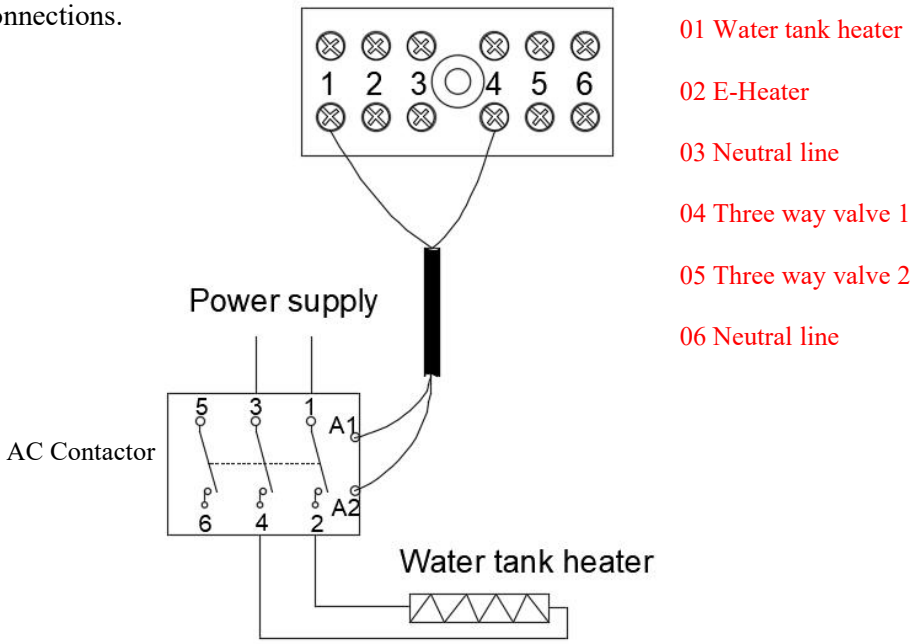

Remark: The water tank heater is optional and requires customers to purchase additionally.

6.2.4 Electric heater wiring

. Please use a 2-core power cable (1.0 mm² x 2) that complies with local safety regulations. The electric heating line of the tank is a 220V signal line, and the electric heating power exceeds 1 KW. external connection with an appropriate relay or contactor is required.

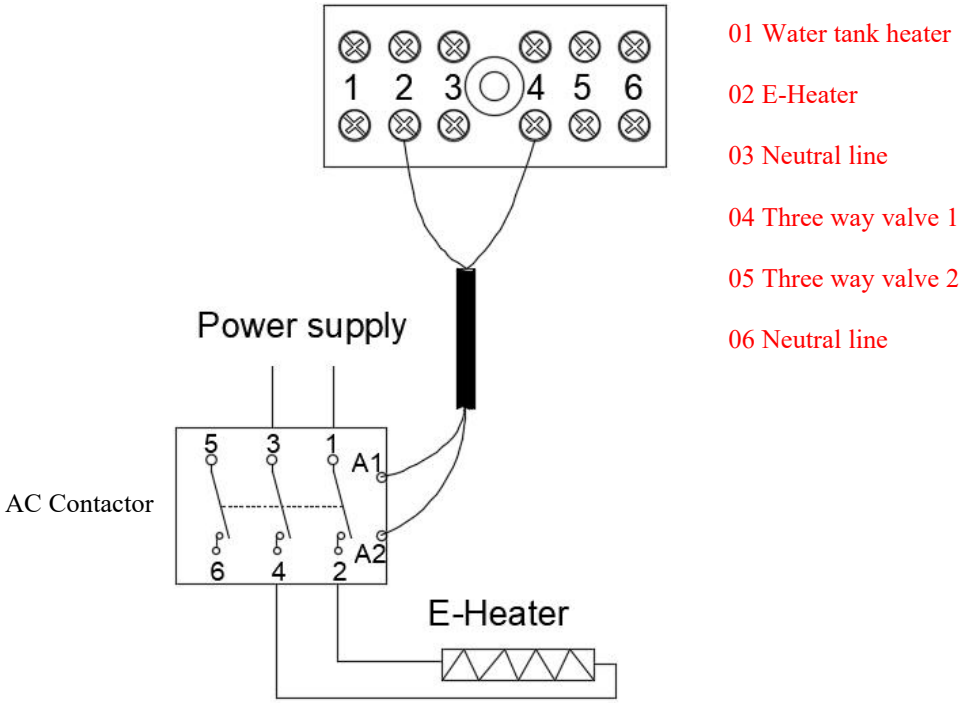

Remark: The e-heater is optional and requires customers to purchase additionally.

6.2.5 Three-way valve wiring

The main board supports two types of 3-way valves: three wire with one control, three wire with two control. As shown in the fig below, taking three wire with one control as an example:

①Please use a 3-core power cable (1.0mm²×3) that meets local safety regulations. Brown to fire wire port (R), yellow to neutral wire port, blue wire to 3-way valve control port.

②Please refer to the diameter of the inlet and outlet pipes of the heat pump to select the diameter of the three-way valve.

③When in hot water mode, defrost mode, antifreeze mode, the three-way valve is turned on. Other modes, the three way valve is off.

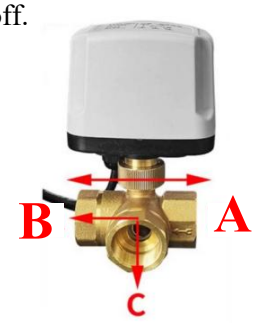

A port: Connect to the outlet water pipe of heat pump

B port: Connect to the inlet water pipe of buffer tank

C port: Connect to the inlet water pipe of DHW tank

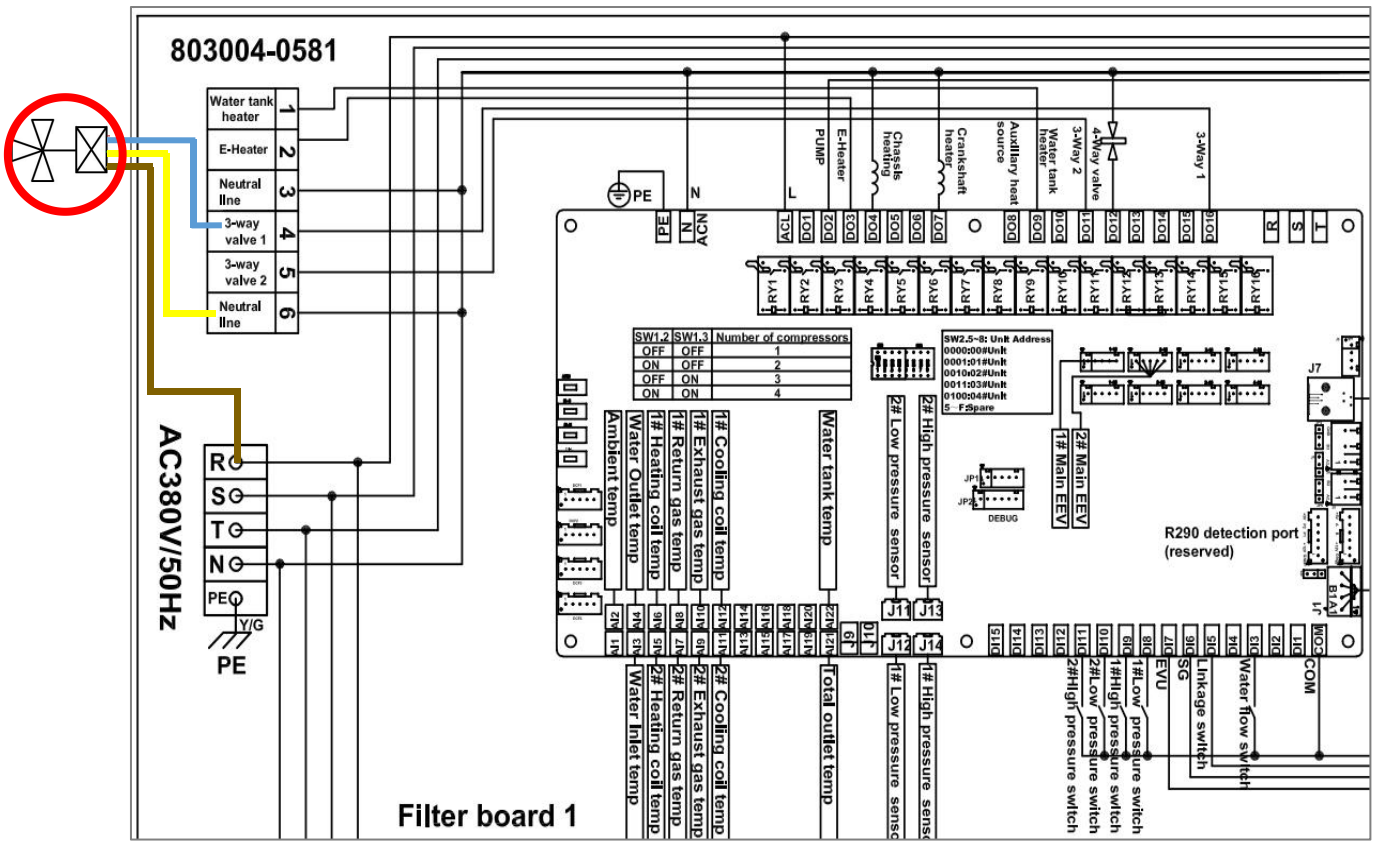

Note: Three way valve 2 port is used for other types that three way valves with 2 control lines, one line connects to 4-three way valve 1, another line connects to 5-three way valve 2, the neutral wire connects to 6-Neutral line.

Remark: The three way valve is optional and requires customers to purchase additionally.

6.2.6 Smart Grid wiring

Connect the SG and the EVU terminals. The system monitors the power situation through the smart module, receives different SG and EVU signals, and determines whether the system is using photovoltaic power or grid power to operate the heat pump.

When connecting the SG and EVU signal, the heat pump will run in hot water mode priority to heat the water, then, according to peak electricity consumption or other conditions, provide hot water to users.

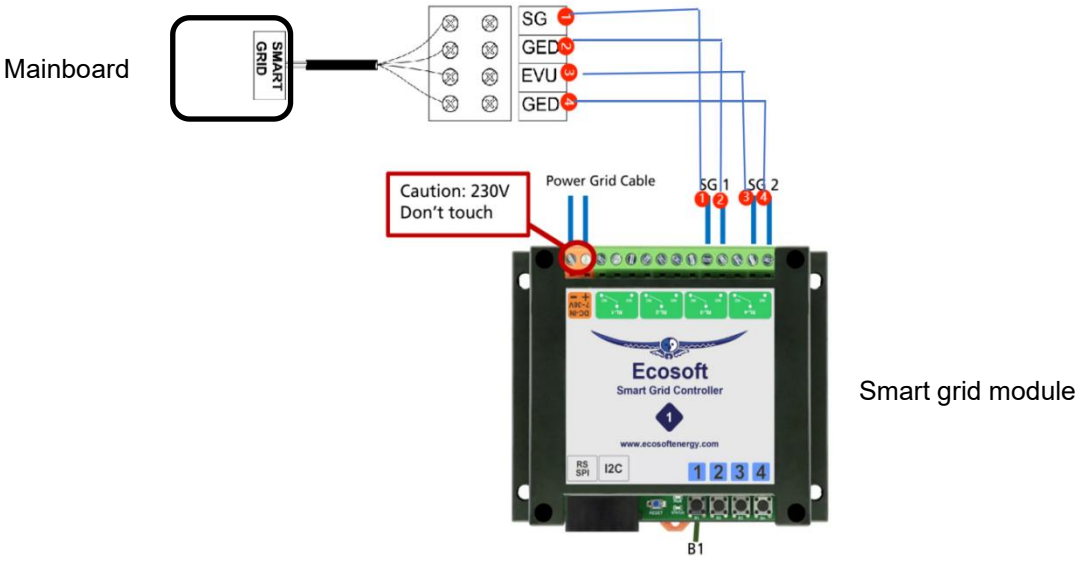

The system will run different logic based on the four signal combinations in the table below:

Operation State	SG	EVU
Increased Operation	ON	ON
Free Electricity Status(PV)	OFF	ON
Normal Operation Low Power Consumption Status	ON	OFF
Decreased Operation Peak Power Consumption Status	OFF	OFF

(1) When SG signal is ON, and EVU signal is ON, the hot water mode is set to be valid, heat pump will operate hot water mode priority and the hot water mode setting temp will be changed to 70℃. When THWt < 69℃, the TBH is on; When THWt ≥ 70℃, the TBH is off.

(2) When SG signal is OFF, and EVU signal is ON, and the hot water mode is set to be valid, heat pump will operate hot water mode priority. When THWt< TWHTs-2, the TBH is on; When THWt ≥ THWTs+3℃, the TBH is off.

(3) When SG signal is ON, and EVU signal is OFF, the unit operates normally according to actual needs.

(4) When SG signal is OFF, and EVU signal is OFF, the unit will not operate hot water mode priority automatically, and the TBH is invalid, disinfect function is invalid. Heat pump forced operation energy-saving mode, and the max running time for cooling/heating is 'Energy-saving operating time', then unit will be off.

*** THWt: Water tank temp**
*** THWTs: Water tank set temp**
*** TBH: Water tank heater**

Remark: The smart grid module is optional and requires customers to purchase it in the local market.

6.2.7 Water tank sensor wiring

Water tank sensor wiring: The heat pump is standard with a water tank sensor(AI22) from factory, the length is about 12m, users can directly install the sensor probe to the corresponding position in the hot water tank.

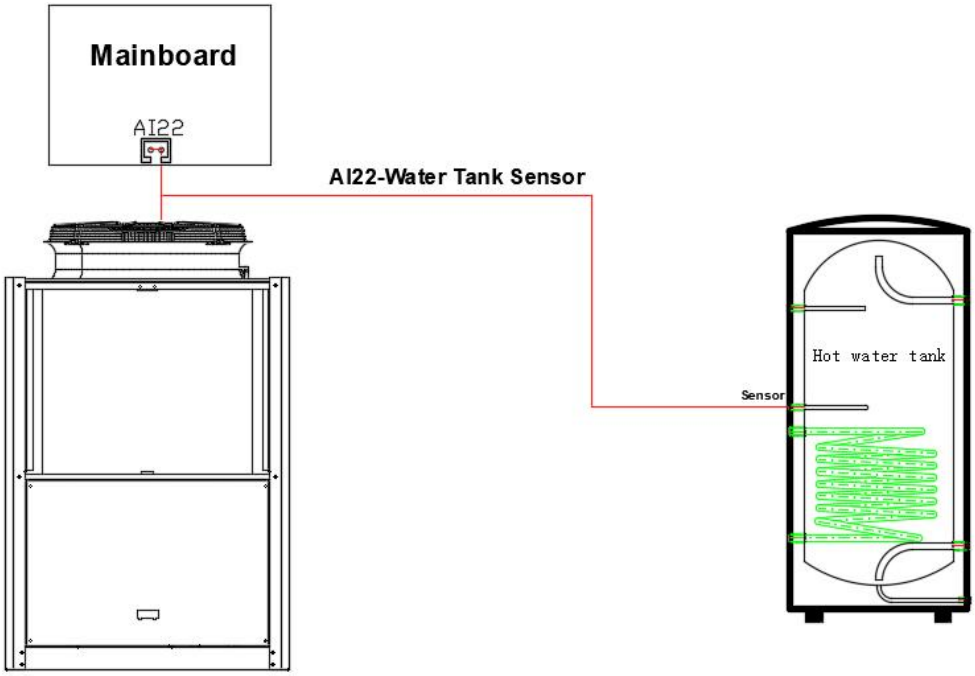

6.2.8 Auxiliary heat source wiring

The main board reserved a control port DO8 to control auxiliary heat source. Please use a 2-core power cable (1.0-1.5 mm² x 2) that complies with local safety regulations. The Auxiliary heat source is a 220V signal line, and please connect it with an appropriate relay or contactor.

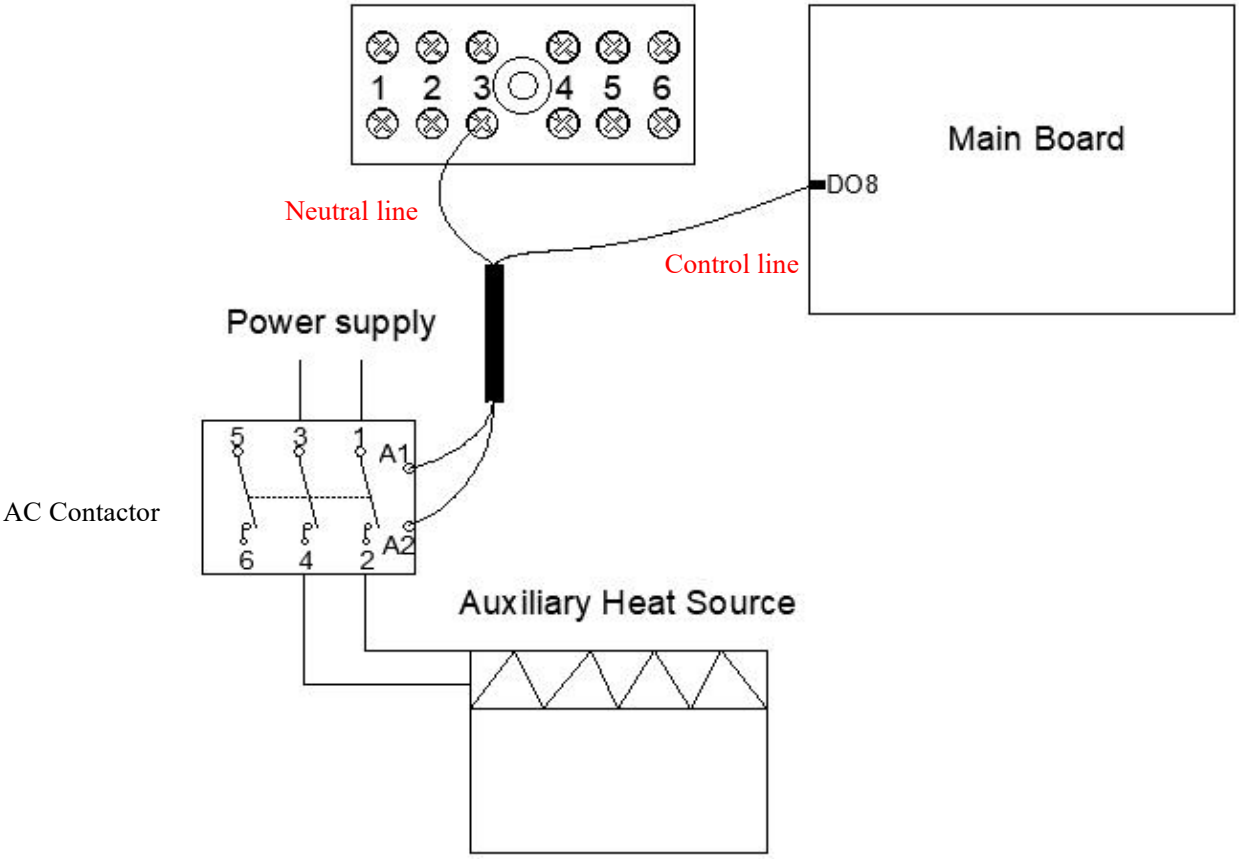

The detailed water pipeline wiring is shown as below:

1	Air Vent Valve	
2	Safety Valve	
3	Manometer	
4	Thermometer	
5	Diverter	
6	3-way Value	
7	Rubber Connetor	
8	2-way Value	
9	Y type filter	
10	Ball Value	
11	Water pump	
12	Check valve	

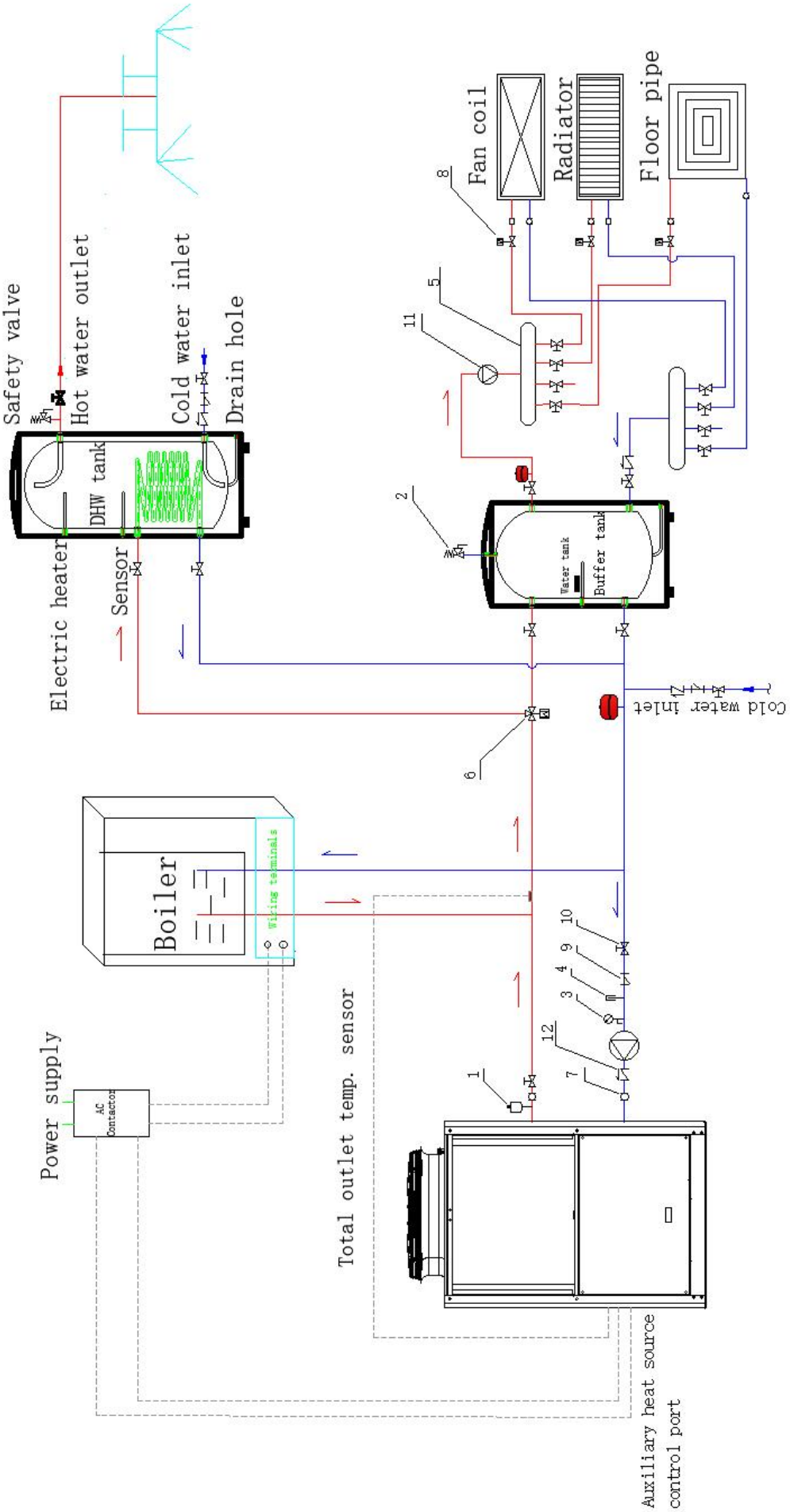
Safety valve
Hot water outlet
Cold water inlet
Drain hole
DHW tank
Electric heater
Sensor
Fan coil
Radiator
Floor pipe
8
5
11
2
Water tank
Buffer tank
Cold water inlet
6
Boiler
Wiring terminals
10
9
4
3
12
7
1
Power supply
AC Contactor
Total outlet temp. sensor
Auxiliary heat source control port

6.2.9 Cascading multiple units

The heat pump support cascading up to 8 units, When conducting a cascade connection, set the dialing number for each mode on the main control board. Dial switches SW1.1-SW1.4 are used to adjust the functional parameters of the unit. **SW2.5-SW2.8** sets the cascading address, 0=off; 1=on. The detailed dialing codes are listed below:

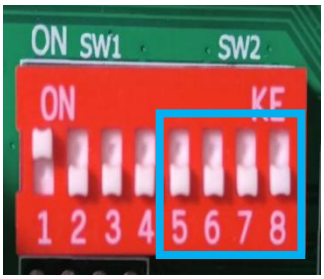

Unit	SW2.5	SW2.6	SW2.7	SW2.8
00	OFF	OFF	OFF	OFF
01	OFF	OFF	OFF	ON
02	OFF	OFF	ON	OFF
03	OFF	OFF	ON	ON
04	OFF	ON	OFF	OFF
05	OFF	ON	OFF	ON
06	OFF	ON	ON	OFF
07	OFF	ON	ON	ON

Electrical wiring diagram:

Remarks: The 0# is the master unit, and #1~#7 are slave units. The mater unit is equipped with a wired controller to control 8 units and can operate the heating/cooling mode and domestic hot water mode.

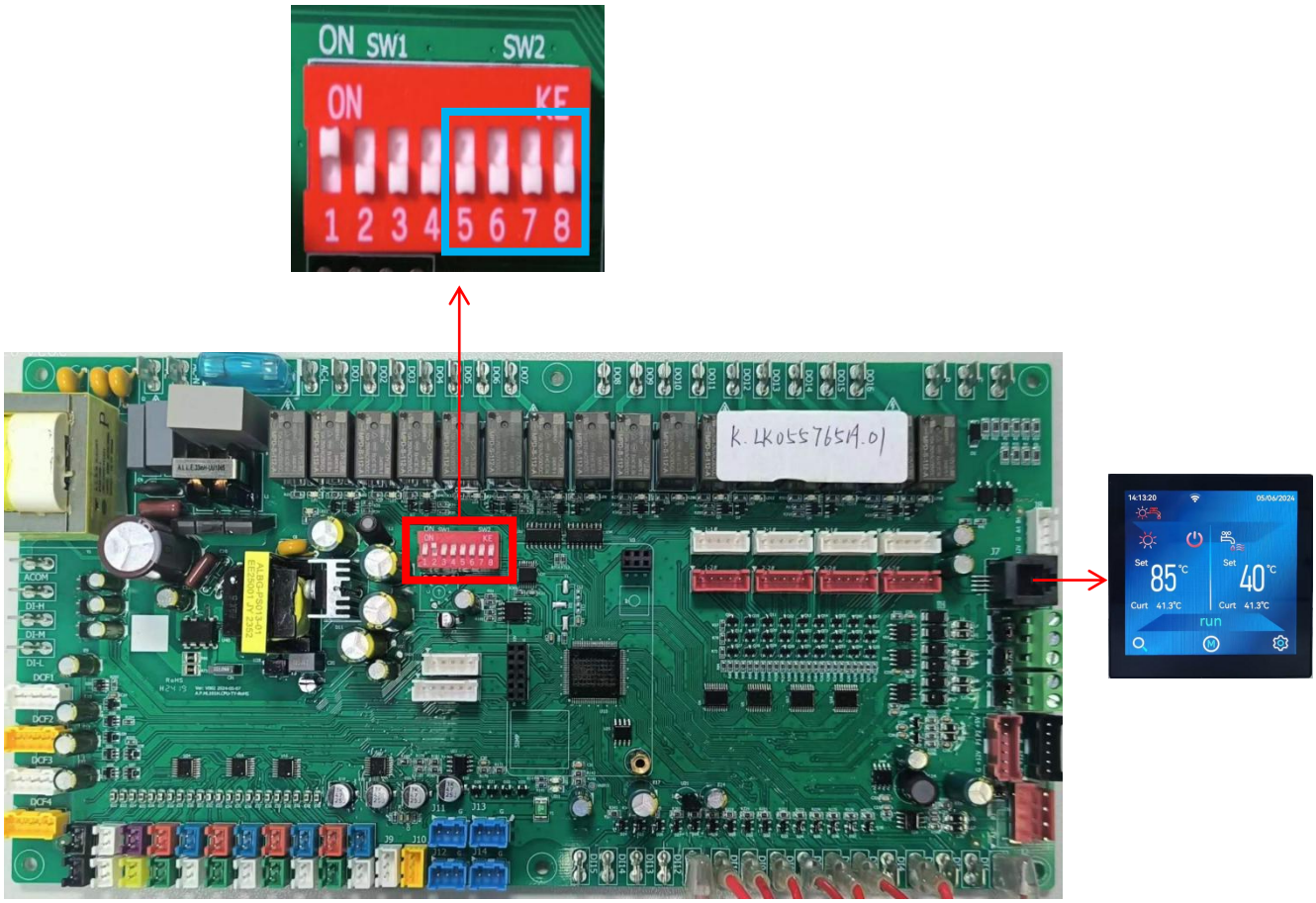

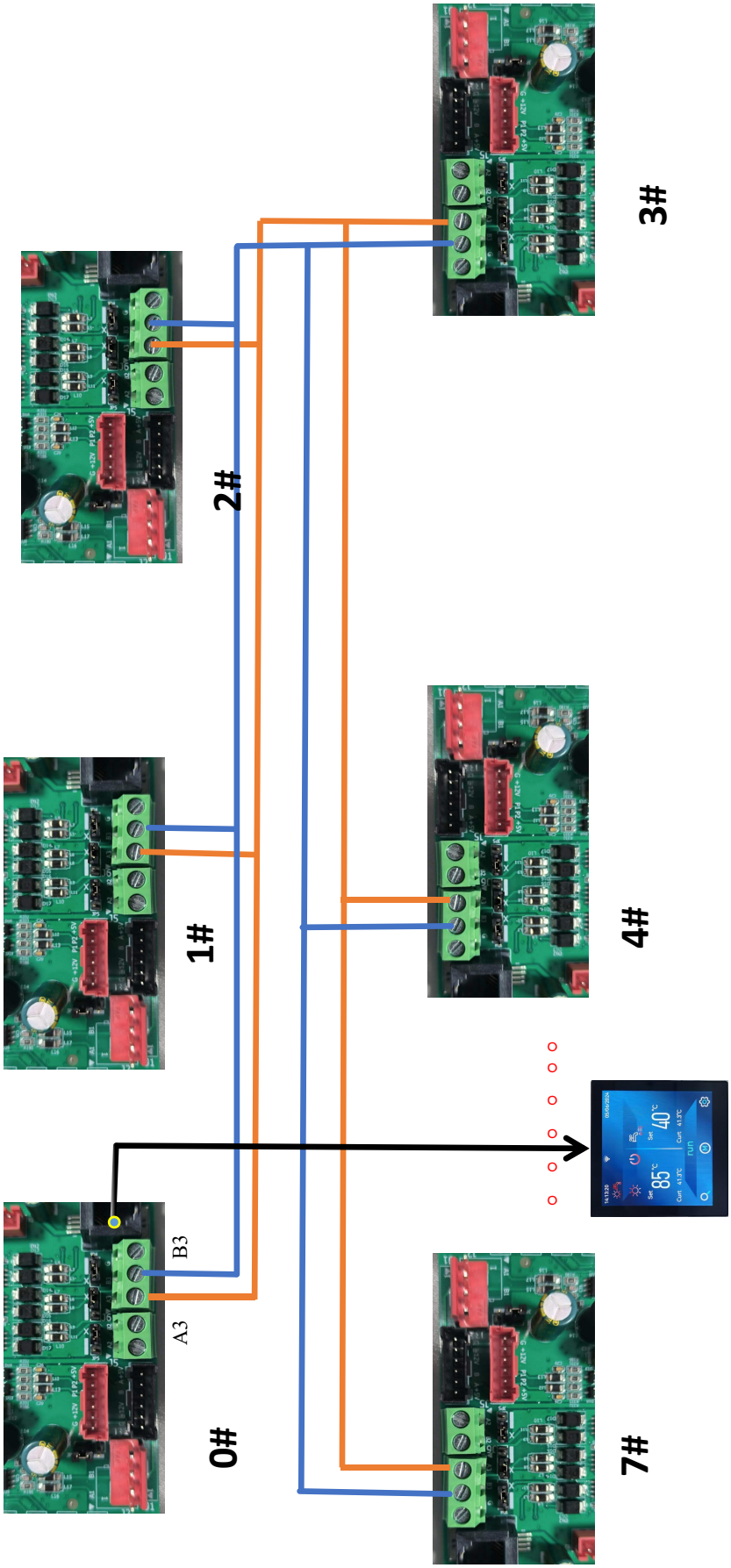
0#
1#
2#
3#
4#
7#
A3
B3

Water pipeline installation diagram:

*DHW is domestic hot water tank.

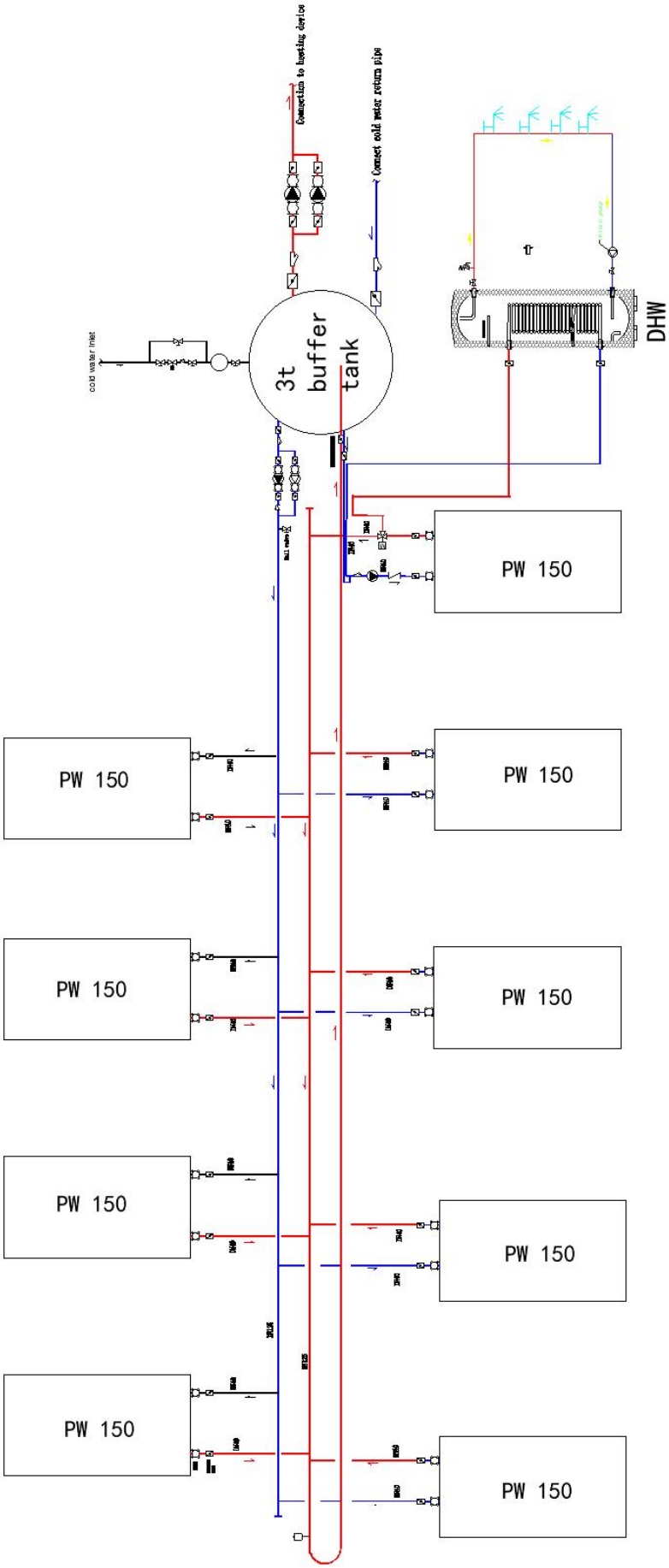

6.2.10 Linkage switch wiring

The linkage switches 5 and 6 need to be short circuited in order to perform normal cooling or heating(Factory setting);

If the customer needs to connect the room thermostat, the communication wire needs to be connected to the linkage switch 5 and 6 terminals in order to control the heat pump.

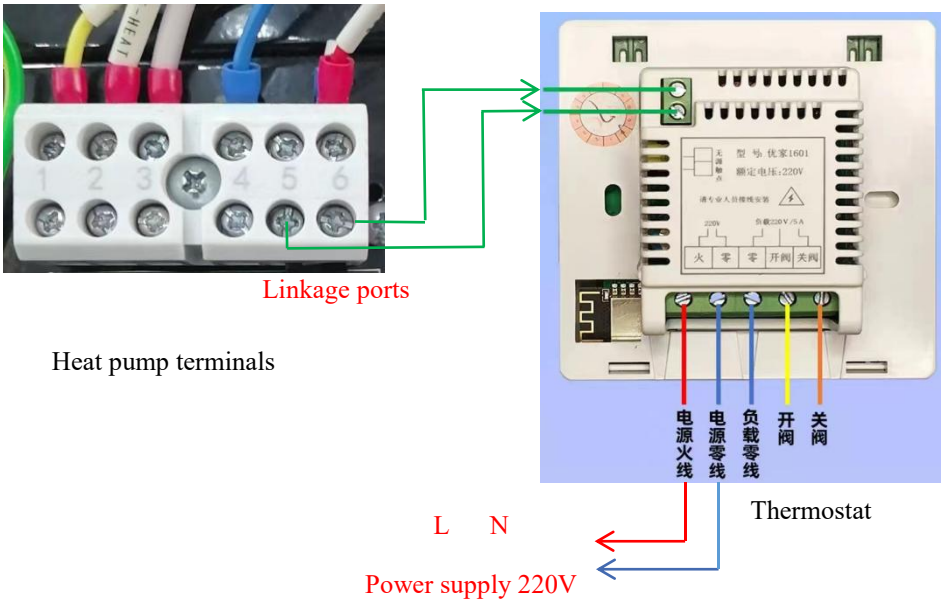

Remark: The thermostat is optional and requires customers to purchase additionally.

6.2.11 Temperature Sensor Position

The heat pump is designed with 8 temperature sensors at the factory, that are used to detecting the temperature and translate the temperature signal to electricity signal to the mainboard.

The installation positions of each temperature sensor and the resistance values measured at a **25 ℃** ambient temperature are shown in the table below.

Description	Sensor	Location in heat pump	Resistance
1# Heating Coil Temp. Sensor	AI6	1# Evaporator pipe	10KΩ
1# Exhaust Gas Temp. Sensor	AI10	1# Compressor outlet pipe	10KΩ
1# Return Gas Temp. Sensor	AI8	1# Compressor inlet pipe	10KΩ
1# Cooling Coil Temp. Sensor	AI12	1# Condenser pipe	10KΩ
2# Heating Coil Temp. Sensor	AI6	2# Evaporator pipe	10KΩ
2# Exhaust Gas Temp. Sensor	AI10	2# Compressor outlet pipe	10KΩ
2# Return Gas Temp. Sensor	AI8	2# Compressor inlet pipe	10KΩ
2# Cooling Coil Temp. Sensor	AI12	2# Condenser pipe	10KΩ
Ambient Temp. Sensor	AI2	On the side of the fins heat ex-changer	10KΩ
Water Inlet Temp. Sensor	AI3	Inlet Water pipe port	10KΩ
Water Outlet Temp. Sensor	AI4	Outlet Water pipe port	10KΩ
Water Tank Temp. Sensor	AI22	Sensor has put in Electric Box(Accessory). Need to set it in the water tank	10KΩ

Total Outlet Temp. Sensor	AI21	(Accessory).Used to control cascading and con nect external heat sources, installed on the mai n outlet pipe	10KΩ

6.3 Wiring diagram

PW150-DKZLRS-E 380V/3Ph/50Hz/60Hz

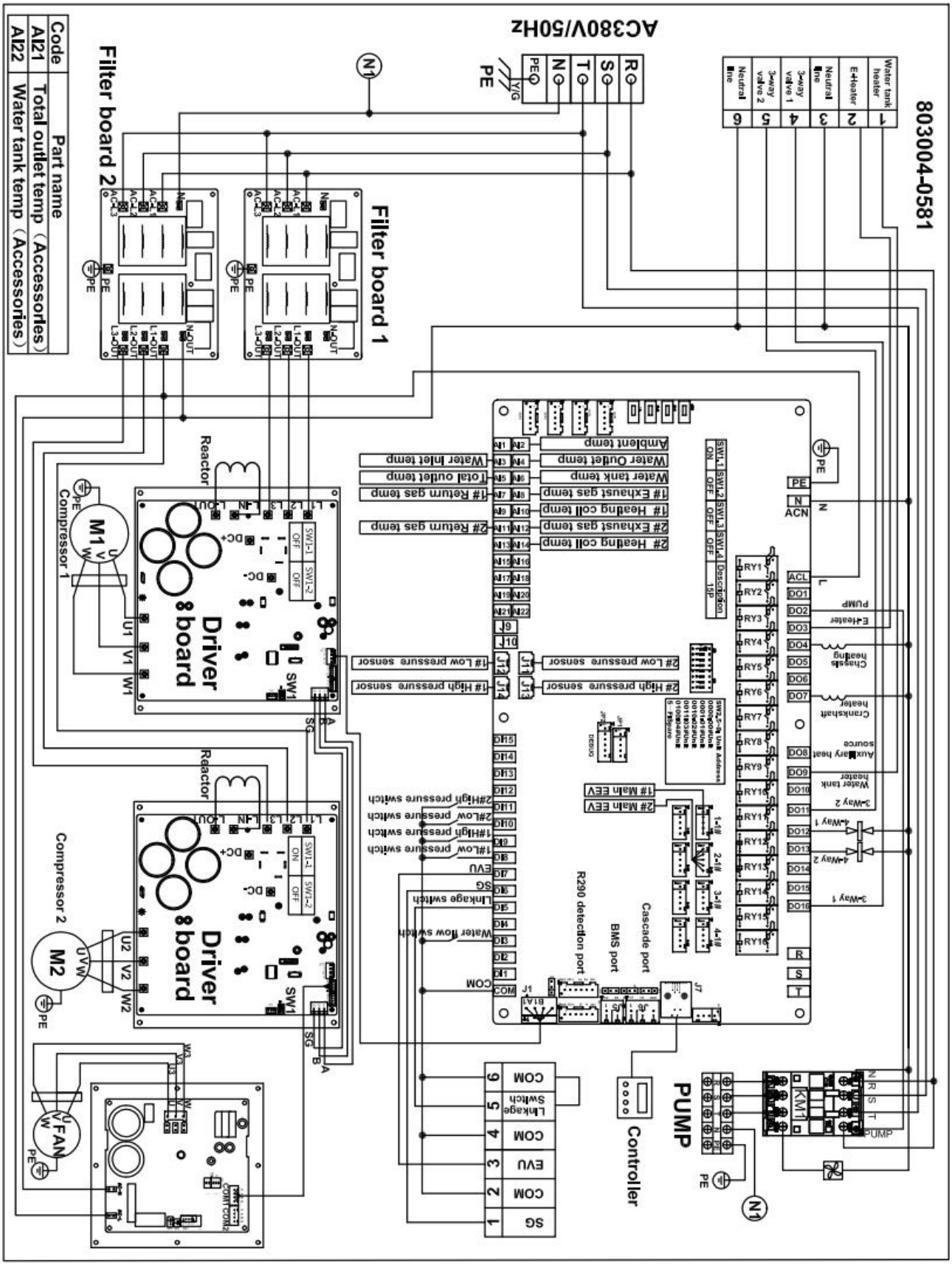

7.Commissioning

7.1 Precautions

1. Trial operation can only be conducted after electrical safety inspection.
2. Do not block the inlet and outlet of the air, as this may cause the unit performance degradation or start the protection procedure that will make the machine unable to operate.
3. Ensure that all valves are opened, flush the water system piping, and ensure that the water cleanliness meets the requirements.
4. Fill and empty the water system to ensure that there is no air in the water system.

7.2 Inspection before start up

1. Mechanical inspection

Check the cabinet and inside pipe system for possible damage during transportation.

Check that the heating water circuit is filled and well vented.

Check the pipe system for leaks.

Check the fan making sure it can move freely.

2. **Electric system inspection**

Check the power supply (voltage/frequency) matches the rating label and specification.

Check all the electrical connections for loose or damaged wires due to transportation.

3. Pipe Inspection

Check all the valves, and water flow directions.

Check for any possible leaks inside or outside of unit.

Check the insulation of all the pipes.

7.3 Trial Operation

1. Use the control panel to control the operation of the machine, and check the following items according to the operation instructions.
2. Check whether the control panel on/off button is normal.
3. Check whether the function key on the control panel is normal.
4. Whether these parameters are normal.
5. Whether the drainage system is normal.
6. The temperature difference between inlet and outlet should be (4-7℃).
7. Whether the vibration and sound are normal during the operation.
8. Whether the discharged air, noise and condensate generated during the operation will affect the neighbors.
9. Whether there is any refrigerant leakage.

Note: When the unit stops and starts, the unit has protection function and the compressor is delayed for 3 minutes.

Note: Please refer to Appendix B and C for commissioning checking.

8.Operating Heat Pump

8.1 Controller Panel

8.2 Display Icon

Icon	Meaning	Icon	Meaning
	Heating mode		Low power status
	Hot water mode		Peak electricity status
	Cooling mode		Free electricity status
	Automatic mode		WIFI regular work
	Lock screen		Timing
	Defrost		Error
	Disinfect		

Definition of Buttons

Button	Description	Function
	On/off	Turn on or turn off the heat pump.
	Query	Query running parameters, current fault code, software version Come back to the up level

	Set	Go to the next step when programming a schedule in the menu structure and confirm a selection to enter in the sub-menu of the menu structure.
	Mode	Switch the operating mode of the heat pump.

8.3 Menu Structure

8.3.1 About the menu structure

You can use the menu structure to read out and configure settings that are NOT meant for daily usage. What you can see and do in the menu structure is described where applicable.

8.3.2 Setting

Click ⚙ on the main interface to enter the setting menu, you can set the wired controller parameters, time and date, timing, WIFI settings, manual defrost, historical fault settings, etc.

8.3.3 Language switch

Click ⚙ on the main interface to enter the user setting menu, click the first item **"Display setting"** to enter the display setting of the wired controller, and then click the first item"Language" to enter the language selection interface(Figure 1). After selecting the language, the prompt in Figure 2 will appear. After clicking "√", the wired controller will restart, and the language switch will be successful after the restart.

8.3.4 System time and date setting

Click ⚙ on the main interface to enter the user setting menu, click the second item "Time and date" to enter the system time and date setting (as shown below), and click the displayed number to modify; After modification, click 🏠 to return to the main interface.

8.3.5 Timing setting

Click ⚙ the main interface to enter the menu, select the third item "Timer" to enter the timing setting, you can set the timing on&off.

(1)Timing on&off setting:

◎ Daily schedule:

Click to view each set of timing Settings and enter the group timing setting interface (Figure 4). Click "Start hour", "Start minute", "End hour", "End minute",click the corresponding window will pop up to set according to the range, click "√" to return to the timing page after setting.

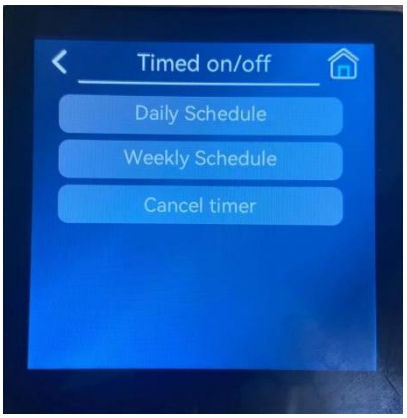

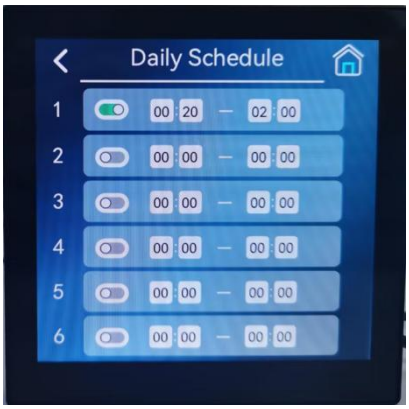

◎ Weekly schedule:

Select the second item in the on&off timing menu, click to enter the weekly timing interface (Figure 1 below), and click the weekly scale according to the actual situation;

Click "NEXT" (Figure 1 below) to enter the weekly timing interface (Figure 2 below) to view the timing settings of each group. The remaining operations are consistent with the daily timing.

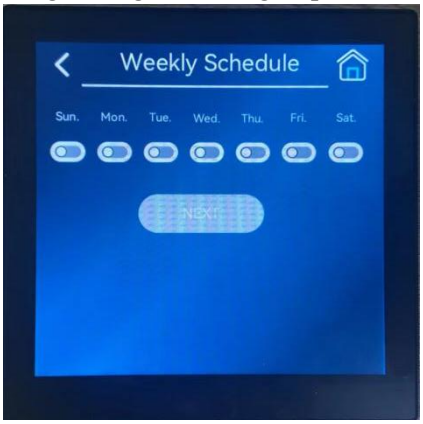

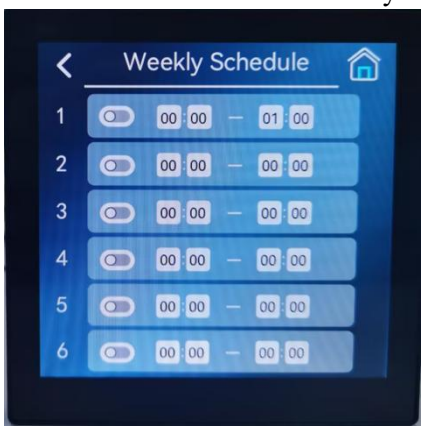

◎ Cancel timing

Select the third item in the timing menu, click the pop-up confirmation pop-up window (Figure 1 below), click to confirm the clear timing and close the pop-up window, click Cancel and close the pop-up w

High temperature sterilization timing

Click the main interface to enter the menu, select the third "Timer" to enter the timing setting, click the second "**sterilization timing**" to enter the setting interface, according to the actual needs, set the start time, week day (the green button), start the sterilization timing function;

8.3.6 Manual defrost

Click ⚙ the main interface to enter the menu, select the fifth item "Mnl defrost" to enter the manual defrost interface, you can choose compressor 1 or compressor 2 to defrost alone.

8.3.7 User Parameter Settings

Click ⚙ the main interface to enter the menu, select the last item, advanced parameters, enter the normal password(123), enter the user parameter setting.

Please refer to the following table for user parameters (Actual parameters are subject to the display of the wired controller) :

Note: Please refer to **Appendix A** for a more detailed explanation of each user parameter function.

Code	Setting item	Setting range	Unit
1	Mode	Cooling mode Heating mode Auto mode Hot water mode Hot water&Cooling mode Hot water&Heating mode	/
2	Cooling setting temp	min…max	℃

3	Heating setting temp	min…max	℃
4	Hot water setting temp	min…max	℃
6	The power-on energy adjustment function	disable available	/
8	Heating target compensation	disable available	/
9	Heating compensation temp 1	min…max	℃
10	Heating compensation temp 2	min…max	℃
11	Heating compensation ambient temp1	min…max	℃
12	Heating compensation ambient temp 2	min…max	℃
13	Cooling target compensation	disable available	/
14	Cooling compensation temp 1	min…max	℃
15	Cooling compensation temp 2	min…max	℃
16	Cooling compensation ambient temp1	min…max	℃
17	Cooling compensation ambient temp 2	min…max	℃
18	Compensation update cycle	0~59	min
19	On-duty function	disable available	/
20	Heating on-duty temp	min…max	℃
21	Cooling on-duty temp	min…max	℃
22	On-duty start hour	0~23	hour
23	On-duty start min	0~59	min
24	On-duty stop hour	0~23	hour
25	On-duty stop min	0~59	min
26	Alarm tone setting	mute Long ring Ring for 10s Ring period of 10s	/
27	Sterilization start week day	Sunday Monday	/

		Tuesday Wednesday Thursday Friday Saturday	
28	Sterilization start hour	0~23	hour
29	Sterilization start min	0~59	min
30	Timed sterilization function	disable available	/

8.4 Startup & Shutdown

8.4.1 Unlock

If the lock icon appears on the screen, the controller is locked. Display the following interface; Press anywhere on the screen, you will be prompted to long press the "lock" icon to unlock. Long press for two seconds, the lock icon will disappear, the interface can be controlled. If there is no action for a long time (about 90 seconds), the interface will be locked.

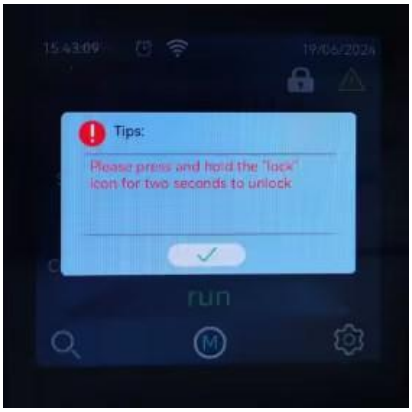

8.4.2 Startup & Shutdown

◎ Startup & Shutdown

Click ⏻ in the main interface to pop up the "Confirm ON" box, and then click "√" to confirm the start of heating, as shown below:

Remark: When the unit is at low temperature and power off for a long time, or when it is powered on for the first time, the unit will enter the preheating stage. During the preheating period, the unit is not allowed to start until the compressor oil heating is completed.

When starting up, a pop-up window will appear with instructions to **wait for preheating** or **continue starting up.** In order to ensure reliable use of the compressor, it is recommended not to skip the unit preheating. Please waiting for the preheating time, after that you can start the unit normally.

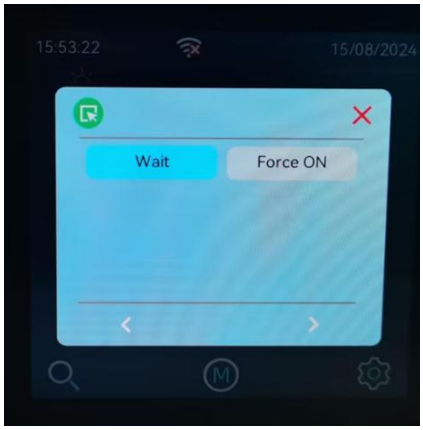

◎ Target temperature setting

In the main interface, firstly click the temperature number (Figure 1 below), then pop up a window (Figure 2 below), input the setting value according to the demand, click "√" to confirm, and directly return to the main interface to complete the temperature setting (Figure 3 below).

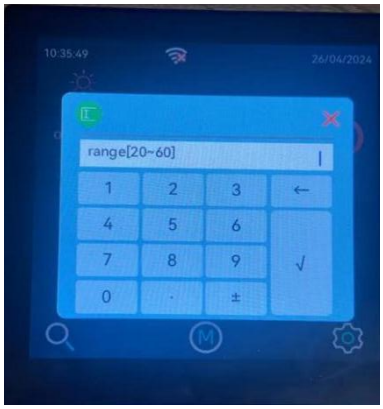

Mode Settings:

Click on the main interface (Figure 1 below), and a mode selection window (Figure 2 below) pops up. Click on the mode to select and return to the main interface directly.

There are auto, cooling, heating, hot water, cooling + hot water, heating + hot water 6 working modes to choose from; In the boot process can not change the working mode, if want to operate you need to shut down the unit;

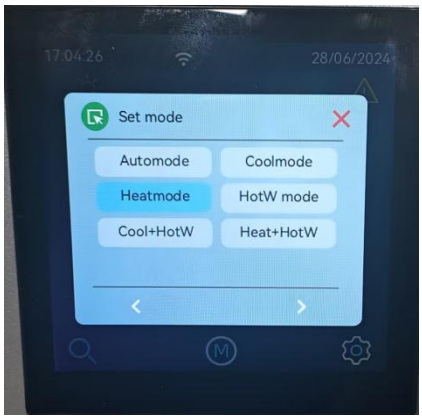

8.5 Operation Parameter Check

On the main interface, click the parameter check menu to query the current fault code of the unit, the state parameters of the unit, and the software version number.

◎List of operation parameters

Code	Description	Remark
1	Envtemp (Ambient temp)	-30~99°C
2	Sys.evap.out T (System outlet water temp)	-30~99°C
3	Sys.evap.inlet (System inlet water temp)	-30~99°C
4	Sys.hottemp (System hot water temp)	-30~99°C
5	Sys.TWout(System Total outlet water temp)	-30~99°C
6	EHeater (Electric heater)	ON/OFF
7	AHS (Auxiliary heat source)	ON/OFF
8	TBH (Water tank heater)	ON/OFF
9	3PV1 (Three way valve 1)	ON/OFF
10	3PV2 (Three way valve 2)	ON/OFF
11	Alarm	ON/OFF
12	1#Outtmp（1# outlet water temp）	-30~99°C
13	Cellwaterin（1# inlet water temp）	-30~99°C

14	ECfan1Drv.temp（ECFan 1 drive temperature）	-30~99℃
15	ECfan1Setspeed（ECFan 1 set speed）	RPM
16	ECfan1cur.speed（ECFan 1 current speed）	RPM
17	ECfan1cur.curr（ECCurrent of fan 1）	A
18	1#CMruntime（1# Compressor running time）	h
19	1#M.EEVOD%（1# Current steps of main EEV）	st
20	1#Setspeed（1# Compressor target speed）	rps
21	1#Curspeed（1# Compressor actual speed）	rps
22	1#Current（1# Compressor current）	A
23	1#Invt.V.Out（Output voltage of variable frequency module # 1）	V
24	1#Invt.temp.（1# Variable frequency module temp）	-30~99℃
25	1#Suct.tmp（1# Suction temperature）	-30~99℃
26	1#Evap.in（1# Evaporator in temp）	-30~99℃
27	1#Invt.V.Bus（1# variable frequency module DC bus voltage）	V
28	1#Coiltmp（1# Evaporator coil temp）	-30~99℃
29	1#Exh.tmp（1# Exhaust gas temp）	0~125℃
30	1#Cur.superH（1# Current superheat）	-30~99℃
31	1#Obj.superH（1# Target superheat）	-30~99℃
32	1#Invt.limit（1#Frequency limiting information of frequency conversion module）	
35	2#CMruntime（2# Compressor running time）	h
36	2#M.EEVOD%（2# Main EEV current steps）	st
37	2#Setspeed（2# Compressor target speed）	rps
38	2#Curspeed（2# Compressor actual speed）	rps
39	2#Current（2# Compressor current）	A
40	2#Invt.V.Out（2# Output voltage of variable frequency module # 1）	V
41	2#Invt.temp.（2# Variable frequency module temp）	-30~99℃
42	2#Suct.tmp（2# Suction temperature）	-30~99℃
43	2#Evap.in（2# Evaporator in temp）	-30~99℃
44	2#Invt.V.Bus（2# variable frequency module DC bus voltage）	V
45	2#Coiltmp（2# Evaporator coil temp）	-30~99℃
46	2#Exh.tmp（2# Exhaust gas temp）	0~125℃
47	2#Cur.superH（2# Current superheat）	-30~99℃
48	2#Obj.superH（2# Target superheat）	-30~99℃
49	2#Invt.limit（2#Frequency limiting information of frequency conversion module）	

50	ACPump（AC Circulation pump）	ON/OFF
51	CrankH（Electric heating of crankshaft）	ON/OFF
52	BtHeat（Chassis electric heating）	ON/OFF
53	1#comp（1#Compressor）	ON/OFF
54	1#4WV（1#Four way valve）	ON/OFF
55	2#comp（2#Compressor）	ON/OFF
56	2#4WV（2#Four way vale）	ON/OFF

8.6 Unit software version query

Click on the main interface to enter the check menu, select version check to enter, and slide up and down to view.

9.General Maintenance

The R290 DC inverter air source heat pump unit is a highly automated device. Regular and effective maintenance on the unit will greatly improve the operation reliability and service life of the unit.

During the maintenance process, pay more attention to the following important tips:

1. The water filter should be cleaned regularly to ensure that the water quality is clean and avoid the damage caused by the blockage of the filter element.
2. Users shall not change the internal structure or wiring of the equipment. All the safety protection devices have been set up before leaving the factory, and changes on them are strictly prohibited. We shall not assume any responsibility for the equipment damage caused by user adjustment.
3. The unit shall clean the surface of the evaporator regularly (every 1-2 months). If the unit is operating in a dirty or oily environment, professionals shall clean the evaporator with designated detergents to ensure the performance and efficiency of the unit.
4. Regularly check the feeding and exhaust device of the water system to prevent air from entering the system, leading to reduced water circulation or water circulation failure, and affecting the cooling and heating efficiency and working reliability of the unit.
5. The intelligent control system can automatically analyze various protection problems in daily use, and display the fault code on the controller. The unit can recover by itself. No maintenance is required for the piping within the unit under normal operating conditions.
6. The power supply and electrical wiring of the unit should be checked regularly to ensure that the wiring is firm and the electrical components are normal. If abnormal, it should be repaired or replaced, and the unit shall be reliably grounded.
7. During the operation of the unit, check all kinds of parts regularly. Check whether the working pressure of the refrigerant system is normal. Check the pipe joint and air injection valve for grease. Ensure that there is no refrigerant leakage in the refrigerant system.
8. Check whether the unit is firmly installed. Do not pile up any debris around the equipment to prevent the blockage of the air outlet. The environment around the unit shall be kept clean, dry and ventilated.
9. When the unit will not be used for a long time to rest after a period of operation, the water in the water system should be drained. And turn off the power supply, cover the equipment. When the unit needs to be used again, wait for the water system to fill the water, until the unit is thoroughly checked, start and preheat for at least 6 hours and restart the unit only after everything is OK.
10. No special repair or maintenance on the water system of the unit unless the water pump is

damaged. It is recommended to clean or replace the water filter regularly when it is very dirty or blocked.

Precautions:

1. The unit shall be equipped with a specialized power supply. The voltage range shall be within ± 10%. The switch shall be an automatic air switch. The set current shall be 1.5 times of the operating current and equipped with no phase protection device. No knife switch is used in the unit.
2. It must be powered up for at least 12 hours before seasonal operation. If the machine does not work for a long time in winter, you must drain all the water in case the pipe and the unit are frozen and damaged. The controller shall be consistent with the unit. If the heating machine stops working in winter, no power shall be removed to avoid freezing and damage.
3. Heat pump switch can not be operated frequently, not more than 4 times within 1 hour. Electrical cabinet shall be protected from damp influence.
4. It is strictly prohibited to flush the DC inverter air source heat pump with water to avoid electric shock or other accidents.

9.1 Daily inspection of heat pump

1. Before starting up, check the temperature parameters, switch status, and load output:

A.The temperature displays are not significantly different from the ambient temperature

B. It is normal to measure with a multi-meter that the high and low pressure switches are normally closed, while the water flow switch is normally open

C. Main parts load display off

3. Check if the voltage is normal before starting up.
4. After starting up, check if the water pressure is normal, listen for any abnormal sounds when starting each part, and check if the current matches the nameplate markings after running smoothly;
5. Check if all parameters are within the normal range according to system and user parameters after operation.

9.2 Maintenance of Main Structural Components

1.The surroundings of the unit should be kept clean to avoid storing debris. Avoid blocking the air outlet and affecting heat exchange efficiency.

2.It is strictly prohibited to connect air energy heat pump units to substandard water sources such as excessive water, lake water, river water, and groundwater.

3.When maintaining the unit, the main unit must be in a power off state. If the shutdown time is long, the water in the unit pipeline should be drained, the power should be cut off, and a protective cover should be put on. When running again, conduct a comprehensive inspection of

the system before starting up.

4.Heat exchanger

A.Regularly clean the water side heat exchanger, it is recommended to clean it every 3 months, and use a hot oxalic acid solution with a concentration of 15% at 50 ℃ -60 ℃ to clean the heat exchanger, then start the built-in circulation pump of the unit to clean for 3 hours, and finally rinse it three times with tap water.

B.When installing pipelines, it is recommended to reserve a three-way valve interface to prevent cleaning solution from entering the water tank, and seal one interface with a screw plug in case of connection during cleaning.

C.Do not use corrosive cleaning solution for heat exchangers or water tanks.

D.The air side heat exchanger should be cleaned regularly (3-6 months) to maintain good heat exchange efficiency. Before cleaning, the power must be cut off. When cleaning surface stains, please use a damp cloth dipped in a small amount of neutral cleaning agent to gently scrub, do not use gasoline or other solvents. Finally, wipe dry with a dry cloth to keep the unit dry.

5.Compressor

Open the junction box, check if the terminals are tightly connected and if there are signs of rust or blackening, and check if the resistance values between the three-phase windings are the same.

6.Water tank

The water tank needs to be cleaned of scale after a period of use (usually 3 months, depending on local water quality), and the drainage valve should be opened until clean water flows out.

9.3 Maintenance of Main Electrical Components

1. General inspection of air circuit breakers, AC contactors, and relays: Check whether the wiring terminals are tight, rusted, and burnt black. Close the switch and check whether the input and output of each phase of the electrical terminal are connected; Check whether the coil of the AC contactor and relay is sensitive and fully engaged.

2. Capacitor: Check for bulging and oil leakage.

3. Mainboard: Check if the power light is on, if the fuse is blown, and if there are any burnt black marks on the board surface.

4. Wired controller: Check whether the buttons are sensitive, whether the interface is not fully displayed, and whether the temperature can be set.

5.Check if the primary voltage and secondary voltage match the nameplate.

9.4 Maintenance of Main Water pipeline Components

1. Water replenishment device: Check if the replenishment pressure is ≥ 0.2MPA and if the check valve is working normally;

2. Filtering device: The Y-filter in the pipeline should be cleaned regularly to prevent blockage. Suggest cleaning every 15-30 days. The waterproof cover of the water pump effectively protects against rainwater immersion, and manually rotate the fan blades of the water pump to check if they are stuck;

3. Exhaust device: Check if it can exhaust normally. If it cannot exhaust normally, remove and clean the filter inside;

4. Water pump device: Check whether it operates smoothly, whether the rotation direction is correct, and whether it is blocked or idling.

9.5 Maintenance of anti-freeze

1. Keep powered on

Please do not turn off the power when the heat pump is temporarily out of use or when it is not in use, as the unit is equipped with anti freeze protection function. Only when the unit is running normally or the circulation pump is running normally, can the unit ensure that water does not freeze in cold weather. Therefore, the water temp can be appropriately lowered to save power. (It is recommended to set the water temp to 25-30 ℃ when not in use for a short period of time, which not only saves electricity but also prevents freezing.).

2.Pipeline insulation

Adequate insulation measures should be taken for the pipeline. Please pay attention to checking whether the insulation wrapping of the pipeline is in place to avoid freezing blockage of the pipeline. The pipeline insulation mainly uses insulation cotton and polyurethane foam.(Small pipes are generally insulated with insulation cotton, while large pipes are insulated with polyurethane foam.)

3.Shutdown precautions

If the user is not at home for a long time, the heat pump needs to be shut down for a long time, or if the power outage lasts for more than 15-30 minutes, the user must drain the water in the heat pump pipeline to prevent the water from freezing when the unit stops running. After thoroughly draining the water, the power should be turned off to prevent the unit from running incorrectly due to water shortage.

4.Precautions for antifreeze

For heat pump systems, it is recommended that users add antifreeze to protect the pipelines from freezing.

It is recommended to pay attention to the following points when using antifreeze:

Choose high-quality antifreeze. Although counterfeit products are cheap, the quality cannot be guaranteed.

2. The amount of antifreeze used is equivalent to the water amount in the system, and a suitable antifreeze should be selected based on the local minimum temperature, the freezing point of antifreeze should be 5-10 degrees lower than the local min temperature. (such as ethylene glycol antifreeze -25 ℃ type, -30 ℃ type).

3. When preparing antifreeze, the ethylene glycol content should not exceed 68%, otherwise the freezing point will no longer decrease, and instead, it will cause an increase in the low-temperature viscosity of the antifreeze and a decrease in heat dissipation.

4. Different types of antifreeze should not be mixed to prevent chemical changes, precipitation, or corrosion.

5. Please regular inspect the pipeline antifreeze status, and it is recommended to replace the antifreeze every 2-3 years.

9.6 Refrigerant Charging

Refrigerant plays an important role in the cooling or heating process, and the lack of refrigerant directly affects the effect of cooling or heating. Before adding the refrigerant, please note the following:

(1) The work shall be done by a professional personnel.

(2) If there is insufficient refrigerant, check leakage in the system. If yes, repair before charging refrigerant, otherwise the unit will run out of refrigerant again after short operation.

(3) Do not add too much refrigerant, otherwise it may cause other faults, such as high pressure, poor performance, etc.

(4) There must be no air in the refrigerant system because air can cause abnormal high pressure, damage the gas pipe and affect the cooling or heating efficiency.

(5) If there is a refrigerant leakage in the room, keep the window open for several minutes, evacuate persons at the site and evacuate the refrigerant naturally.

Note: Always use a weight scale to measure the refrigerant amount entering the unit.

The heat pump has been charged with refrigerant before leaving the factory, and the charging amount is shown in the table below.

Model	Power supply	R290 Refrigerant amount from factory
PW150-DKZLRS-E	380V/3Ph/50Hz/60Hz	4.0kg

Note: If there is a leakage during the operation of the heat pump, please power off unit and then discharge the refrigerant in the system and vacuum it, next it is necessary to refer to the refrigerant charging amount on the nameplate.

9.7 Precautions for heat pump operation in summer

During the operation of the heat pump in summer, to ensure efficient and stable operation of the equipment and extend its service life, please pay attention to the following matters:

9.7.1 Outdoor unit ventilation

1.Make sure there are no obstacles around the outdoor unit to maintain good air circulation.

2.Clean the heat sink of the outdoor unit regularly to prevent dust accumulation from affecting the heat dissipation effect.

3.If the air circulation is not smooth and the heat cannot be discharged in time, it may easily cause the unit to report a high pressure alarm.

9.7.2 Regular cleaning and maintenance

1.Filter Cleaning: Check and clean or replace filters regularly to keep them clean and ensure smooth waterflow.

2.Tank and heat exchanger cleaning:

- Clean the dirt and algae in the water tank regularly to prevent biological fouling.
- Clean the heat exchanger regularly to prevent scaling from affecting heat exchange efficiency.

9.7.3 Monitoring Water System

1.Replenish water in time: Check the water level in the water tank frequently and add softened water or deionized water in time to prevent the water pump from running idle.

2.Drainage system inspection:

- Ensure that the condensate drain pipe is unobstructed to prevent blockage and water accumulation.
- Clean the condensate pan regularly to prevent water accumulation and bacterial growth.

3.Water flow switch inspection:

- Make sure the unit is equipped with a water flow switch and the port of the water flow switch on the main control board is not short-circuited.
- If the water flow switch is short-circuited, resulting in a small water flow, the temperature inside the plate heat exchanger may be too low, causing the water to freeze and crack the components.

9.7.4 Operating environment temperature control

1.Ambient temperature monitoring:

- Ensure that the heat pump operates within the ambient temperature range specified by the manufacturer to avoid high temperature environments affecting the life of the equipment.
- If the unit consists of indoor and outdoor unit, keep the indoor and outdoor units well ventilated and avoid high temperatures and stuffy environments.
- If the unit is used in an environment with too high temperature, the power of the unit will

increase, which may easily cause the compressor to fail with an overcurrent alarm of Er20.

9.7.5 System pressure and refrigerant management

1.System pressure monitoring: Regularly monitor the high and low pressures of the system to ensure that the pressures are operating within the normal range.

2.Refrigerant inspection: Ensure that the refrigerant is sufficient and leak-free, and check and refill the refrigerant regularly.

9.7.6 Electrical system maintenance

1.Electrical connection inspection: Check the electrical connections regularly to ensure that they are not loose or aged.

2.Compressor and fan inspection: Check the operating status of the compressor and fan to prevent abnormal noise and vibration.

9.7.7 Reasonable temperature setting

1.Reasonable temperature settings: Avoid setting the temperature too low. It is generally recommended to set the indoor temperature between 24-26℃.

9.7.8 Fault prevention and handling

1.Prevent frequent mode switching: Avoid frequent switching between cooling and heating modes to prevent equipment wear and increased energy consumption.

2.Handling of abnormal situations: If the equipment is found to be operating abnormally, it should be stopped and checked in time, and professionals should be contacted for repair to prevent small faults from causing big problems.

By following the above precautions, you can ensure that the heat pump operates efficiently and stably in summer, extend the service life of the equipment, and maintain a good cooling effect.

10.Fault list and trouble shooting

10.1 Controller fault code

(1) Click on the main interface to enter the query menu. Then click on the main interface to enter the menu, select the sixth item "His err", enter the historical fault query, click on any fault to view the fault occurrence time, code, and fault details. Click the delete button to delete historical fault records.

10.2 Owner Inspection

We recommend the householder to check the heat pump regularly, especially after abnormal weather conditions.

It is also recommended that you should follow the following basic guidelines to checking:

1. Ensure space is enough around the unit for maintenance or repair.
2. Keep the top and surrounding areas of the heat pump clean and good air flow
3. Ensure no plants close to the unit which may has the risk of leaves/branches drop into the inside from the Fan
4. Do not spray water on the unit when sprinkling plants to avoid corrosion and damage of the unit.
5. Keep the unit grounding well all the time.
6. Maintain the external filter regularly to ensure the cleanliness of the water to avoiding damage the internal components of the unit.
7. Check the wiring of the power supply and electrical components regularly to ensure their normal operation.
8. Do not change the settings by yourself after all safety guards have been installed. If any changes are required, please contact an authorized professional installer / agent.
9. If the unit is installed under a roof without a drain, please ensure that the necessary measures are taken to prevent excessive water from splashing directly or flowing into the unit.
10. If water flows into the unit and touches any electrical component, cut off the power supply and stop using the unit. Also, please contact an authorized professional installer / agent for inspection.

11. If power consumption from the unit increased too much not due to cold weather condition, Please get in touch with local authorized installer agent for checking

12. When not in use for a long time, please close the unit, and cut off power supply to the unit.

10.3 Trouble shooting

The following troubleshooting information is used to resolve the problems encountered in the unit use.

Warning-Risk of electric shock

Ensure that all high voltage circuits are disconnected before opening the unit to starting installation. Contact with these circuits may cause death or serious injury to the user, installer, or other person, and possible property damage.

Non-professionals, do not turn on the heat pump anywhere to avoid electric shock.

1. Keep your hands and hair away from the fan blades to avoid injury.

2. If you are not familiar with your heat pump:

A) Be sure to consult your authorized installer / agent before attempting to adjust or repair the equipment.

B) Read the complete installation and user guide before trying to operate or adjust the heat pump.

Important: The main power of the heat pump must be turned off before repair.

10.3.1 Main board terminals introduction

Please refer to the following functional guidelines for different ports on the main board.

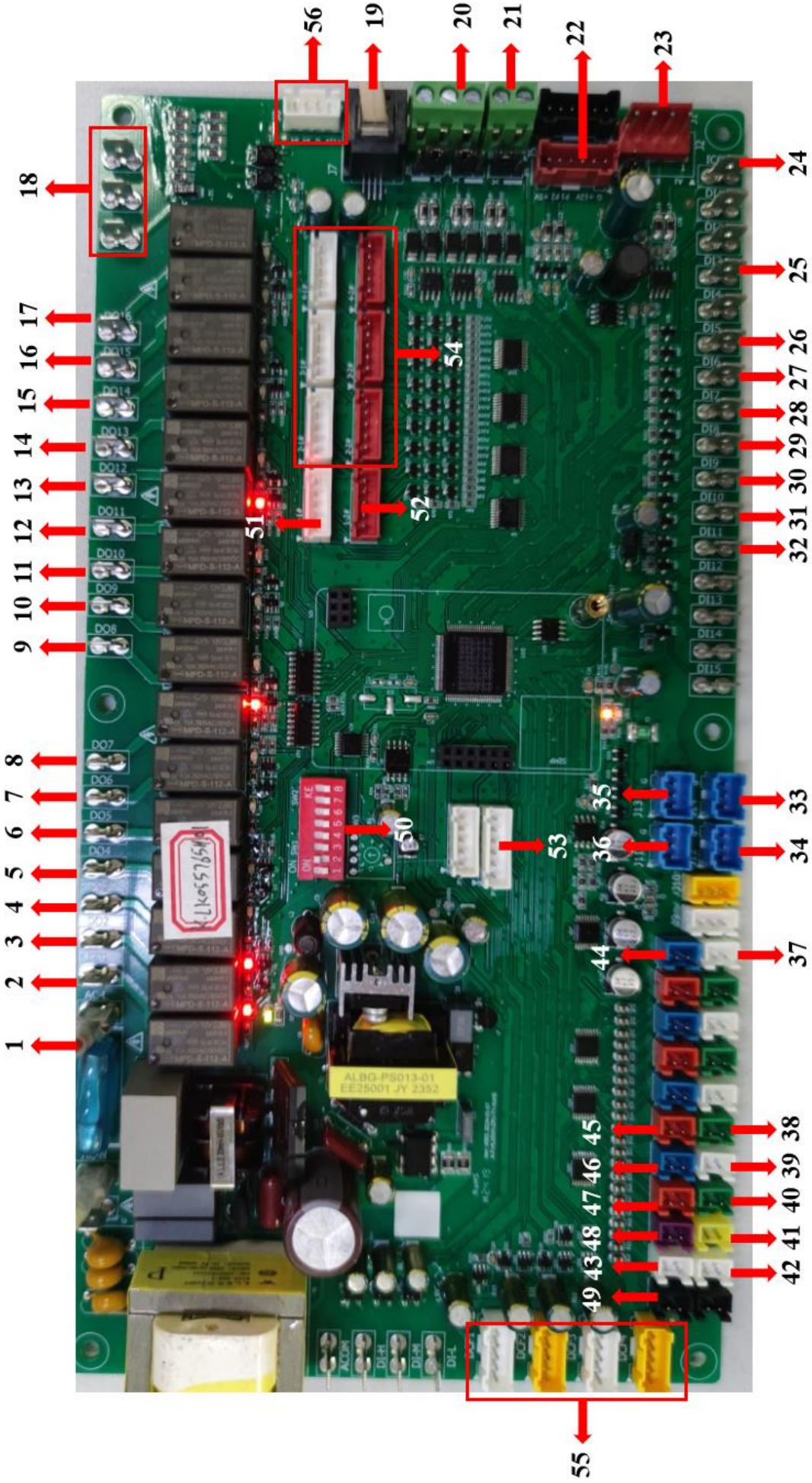
1
2
3
4
5
6
7
8
9
10
11
12
13
14
15
16
17
18
19
20
21
22
23
24
25
26
27
28
29
30
31
32
33
34
35
36
37
38
39
40
41
42
43
44
45
46
47
48
49
50
51
52
53
54
55
56

No.	Descriptions	No.	Descriptions
1	ACL Live wire port	29	#1 Low pressure switch connection
2	Reserved	30	#1 High pressure switch connection
3	Water pump control live port	31	#2 Low pressure switch connection
4	E-heater control live port	32	#2 High pressure switch connection
5	Chassis heating control port	33	#1 High pressure sensor
6	Reserved	34	#1 Low pressure sensor
7	Reserved	35	#2 High pressure sensor
8	Crankshaft heater control port	36	#2 Low pressure sensor
9	Auxiliary heating source control port	37	Total outlet temp sensor
10	Water tank heater control port	38	#2 Cooling coil temp sensor
11	Reserved	39	#2 Exhaust gas temp sensor
12	Three way valve 2 control port	40	#2 Return gas temp sensor
13	Four way valve control port	41	#2 Heating coil temp sensor
14	Reserved	42	Water inlet temp sensor
15	Reserved	43	Water outlet temp sensor
16	Reserved	44	Water tank temp sensor
17	Three way valve 1 control port	45	#1 Cooling coil temp sensor
18	Three phase live wires(R S T)	46	#1 Exhaust gas temp sensor
19	Wired controller connection port	47	#1 Return gas temp sensor
20	Cascading ports(A3 B3)	48	#1 Heating coil temp sensor
21	BMS connection ports(A2 B2)	49	Ambient temp sensor
22	R290 detection port	50	Dip switch to set address for cascading units
23	Communication port between main board and inverter drive board	51	#1 Main EEV
24	Common port	52	#2 Main EEV
25	Water flow switch	53	Debug port
26	Linkage switch control port	54	Reserved
27	SG output connection	55	Reserved
28	EVU output connection	56	Reserved

10.3.2 User's load terminals introduction

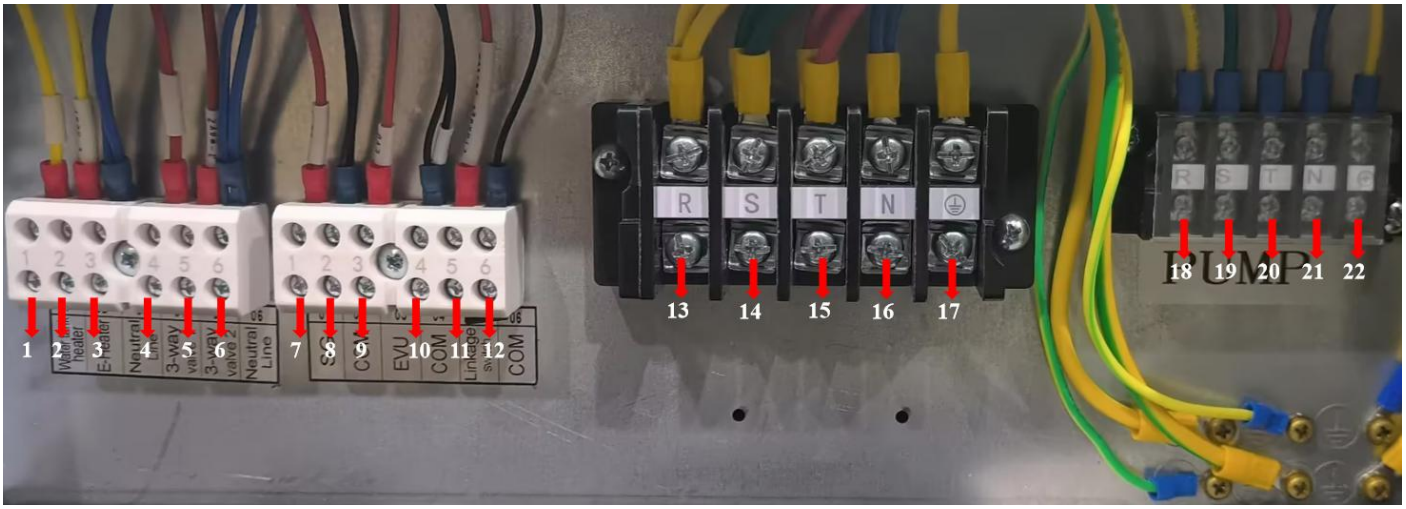

No.	Descriptions	No.	Descriptions
1	Water tank heater control wire	12	COM connection
2	E-heater control wire	13	Power cable live line R
3	N connection for neutral line	14	Power cable live line S
4	Three way valve control port 1	15	Power cable live line T
5	Three way valve control port 2	16	Power cable zero line N
6	N connection for neutral line	17	Earth line
7	SG signal connection	18	Water pump live line R
8	COM connection	19	Water pump live line S
9	EVU signal connection	20	Water pump live line T
10	COM connection	21	Water pump zero line N
11	Linkage Switch connection	22	Water pump Earth line

10.3.3 Troubleshooting of fault codes

The following common fault codes will be appeared on the controller if happened.

Reset method: Power On Reset, A = automatic reset; M = manual reset; A/M = limited automatic reset; refer to "Fault Reset Instructions" at below of table; Module XX indicates the module number of the cascade unit and n# indicates which compressor is on the same unit.

Error Code	Fault name	Reset mode	Alarm action	Solution suggestion
2	System Module: EEPROM data error fault	Power On Reset	Serious failure, stop the unit.	Initial all parameters and re-power up, if the fault cannot be eliminated, please contact us.
3	System Module: External Interlock Failure	M	Serious failure, stop the unit.	1. Check whether the corresponding "normally open and normally closed" settings of the inputs are consistent, and the inconsistency indicates a fault state. 2. If there is no problem with the "Normally open, normally closed" setting, check the cause of the unit abnormality.
9	System Module: Insufficient water flow	A/M	● When **[insufficient water flow to open the pump]** is used, stop all compressors and the water pump does not stop; ● When **[insufficient water flow to open the pump]** is disable, stop all compressors, stop water pumps.	
178	Module xx: Insufficient water flow for unitary module	A/M	Stop module xx.	
177	System Module: Power supply failure	M	Serious faults, stop the unit (directly stop the compressor).	1. Check the three-phase power error phase detection J1, wiring is normal . 2. Check whether the corresponding "normally open and normally closed" settings of the inputs are consistent, and the inconsistency indicates a fault state. 3. If there is no problem with the "Normally open, normally closed" setting, check the cause of the abnormality.
1	Module xx: Power supply failure	M	Stop module xx.	
41	System Module: System outlet water temp is too low	A	Stop all compressors and fans.	1. Check if all the relevant set temperature parameters are in normal range. 2. Check that the outlet temp probe is mounted in the correct position or damaged. 3. Check what is causing the abnormality in the associated temperature.
200	Module xx: 1# Outlet water temp is too low	A	Stop module xx.	
40	System Module: System outlet water temp is too high	A	Stop all compressors and fans.	
196	Module xx:	A	Stop module xx.	

	1# Outlet water temp is too high			
204	Module xx: module outlet/inlet temp difference abnormal	M	Stop module xx.	1. Test whether the temperature probe position is in accordance with the correct. 2. Test whether the wiring is firm and reliable.
0	Module xx: Communication faulty	A	Stop module xx.	Check the communication cable between modules is connected properly and making good contact.
1#73、2#105	Module xx: n#Compressor protection		Stop the corresponding compressor and fan of module xx.	1. Check whether the corresponding "normally open and normally closed" settings of the inputs are consistent, and the inconsistency indicates a fault state; 2. If the "normally open and normally closed" setting is not in question, it is possible to set the "normally open and normally closed" setting. problem, check the cause of the unit abnormality.
1#49、2#81	Module xx: n#Compressor high pressure	A/M	Stop the corresponding compressor and fan of module xx.	
1#48、2#80	Module xx: n#Compressor low pressure	A/M	Stop the corresponding compressor and fans of module xx.	
1#66、2#98	Module xx: n#Compressor low pressure protection	A/M	Stop the corresponding compressor and fans of module xx.	
1#67、2#99	Module xx: n#Compressor high pressure protection	A/M	Stop the corresponding compressor and fan of module xx.	
1#58、2#90	Module xx: n# Fin coil temperature too high	A/M	Stop the corresponding compressor and fans of module xx.	1. Check the relevant set temperature parameter values for problems. 2. Check that the probe is mounted in the correct position. 3. Check what is causing the abnormality in the associated temperature.
1#59、2#91	Module xx: n#Exhaust gas temperature too high	A/M	Stop the corresponding compressor and fan of module xx.	
1#68、2#100	Module xx: n#Exhaust gas temperature too low	A/M	Stop the corresponding compressor and fans of module xx.	
1#72、2#104	Module xx: n#Frequency inverter failure	A/M	Stop the corresponding compressor of module xx.	Check the fault code of the faulty inverter in the status query, please contact us.
1#71、2#103	Module xx: n#Inverter module communication failure	A	Stop the corresponding compressor of module xx.	Test the [Inverter Base Address] setting. Check the communication address setting of the inverter.
1#248、2#250	Module xx: EC fan n fault	A/M	Stop the corresponding compressor and fans of module xx.	Check the fault code of the malfunctioning EC fan in the status query and refer to the EC fan

				manual to troubleshoot the problem.
1#247、2#249	Module xx: EC fan n communication failure	A	Stop the corresponding compressor and fans of module xx.	Detect the [EC Fan Base Address] setting. Detects the communication address setting of the EC fan.
1#70、2#102	Module xx: n# The temp difference between ambient temp and fin coil temp	M	Stop the corresponding compressor and fans of module xx.	Detect changes in stopping ring fin differential and allowable ring fin differential.
34	System Module: System outlet water temp failure	M	Emergency stop of all compressor during operation. Alarm only when anti-freeze.	1. Check that the sensor probe is connected properly; 2. Check that the unconnected probe has not been deactivated.
35	System Module: System inlet water temp failure			
45	System module: System total water outlet temp fault		Alarm only	
36	System module: Water tank temp fault		During operation, emergency stop all compressors.	
33	System Module: Ambient temp sensor failure		Serious failure, stop the unit.	
192	Module xx: 1# Outlet water temperature fault		Stop the module from working.	
1#56、2#88	Module xx: n# Exhaust temperature fault		Stop the appropriate presses and fans.	
1#55、2#87	Module xx: n# Fin coil temperature failure			
1#61、2#93	Module xx: n#Compressor low pressure failure	M		
1#62、2#94	Module xx: n#Compressor high pressure failure	M		
1#53、2#85	Module xx: n# Post-valve temperature failure	A		
1#52、2#84	Module xx: n#Suction temperature fault			

213	Module xx: Condenser temp sensor failure	A	Alarm only, no shutdown	
208	R290 sensor failure	A	Alarm only, no shutdown	1. Check that the sensor probe is connected properly; 2. Check that the unconnected probe has not been deactivated.
210	Unit return water temp sensor failure	A	Alarm only, no shutdown	
209	R290 refrigerant leakage alarm	M	Stop all modules and run the fan at the lowest speed	Power off the unit immediately, ventilate, check the refrigerant leakage point of the unit, and repair it

10.3.4 Troubleshooting and Maintenance of Common Fault Codes

9 System Module: Insufficient water flow; 178 Module xx: Insufficient water flow for unitary module	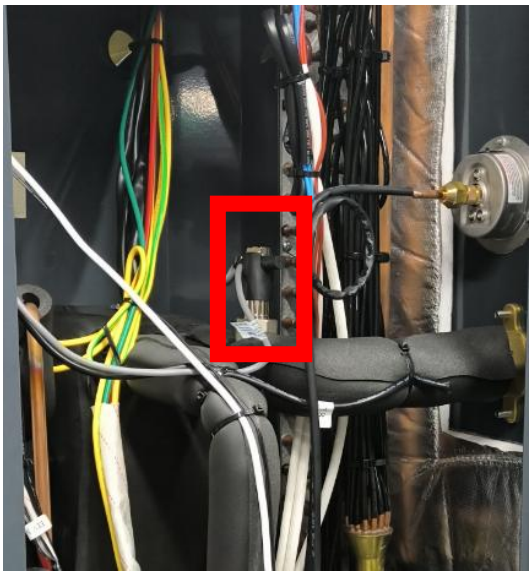 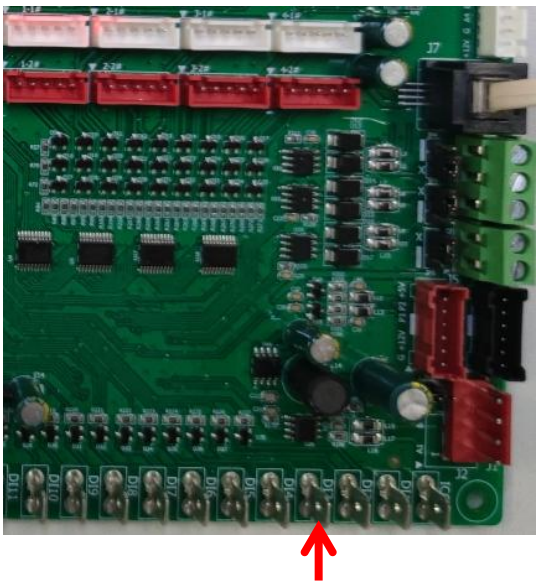	Maintenance: Water pipe 1. Check whether the water pipe valve is fully open or not, ensure smooth water flow. 2. Check whether the temperature difference between the inlet and outlet water is within the range of 4~7 degrees Celsius or not. If the temperature difference between the inlet and outlet water is too large, it indicates that the water flow maybe too low due to unobstruction, and the heat of the heat exchanger cannot be taken away in time, so it is necessary to clean the water pipe or exhaust air (pipeline exhausting and external water pump exhausting). 3. Check whether the head and flow of the water pump is enough or not. If the flow rate and the head is not enough, the without water pump unit needs to be replaced with a suitable matching water pump. Please recalculate and select a suitable water pump according to section 4.3. Pay attention to the installation position and direction of the water pump. The water pump must be installed at the inlet of the unit rather than outlet. Electronic control: Electric control: after shut down the unit, check the water flow switch. Find the water flow switch terminal(DI3) on PCB main circuit board, pull out the terminal, and short the terminal instead. Turn on the heating mode of the unit again for 5 minutes and check whether the water temperature difference is between 4-7 degrees Celsius or not. If it is normal, determine the water flow switch installation is bad or fault, need to be installed or replaced;

1#49、2#81 Module xx: n#Compressor high pressure; 1#67、2#99 Module xx: n#Compressor high pressure protection	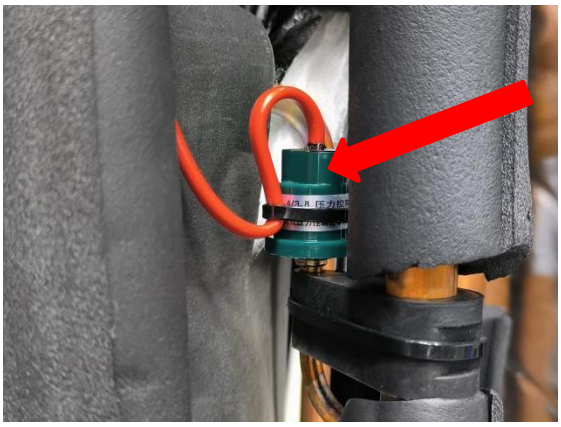 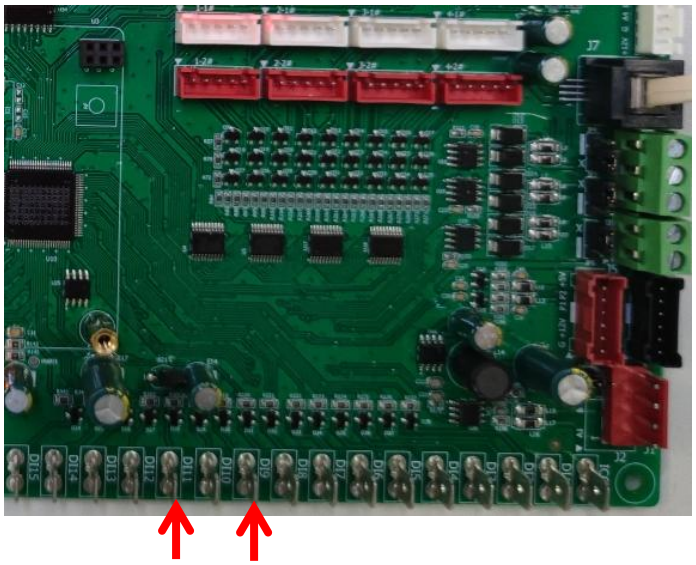 	**Electronic control:** 1. Check whether the high pressure switch is damaged or the sensor wire is broken or not. Make sure the wiring terminals are connected correctly (#1 DI9 port, #2 DI11 port) 2. Check whether the position of the inlet temperature probe is correct or falls off (the inlet pipe of the unit). Make sure they are connected correctly; **Refrigerant system:** After turning off the heat pump for 10 minutes, check whether the refrigerant pressure gauge parameters of the unit are normal, and connect to the low-pressure inspection port with pressure gauge to measure whether the refrigerant in the system is normal or not (operated by professionals). Danger warning: Since it will be in contact with R290 refrigerant, please make sure there is no open flame, must have good ventilation, and operate in a safe environment.

1#49、2#81 Module xx: n#Compressor high pressure; 1#67、2#99 Module xx: n#Compressor high pressure protection	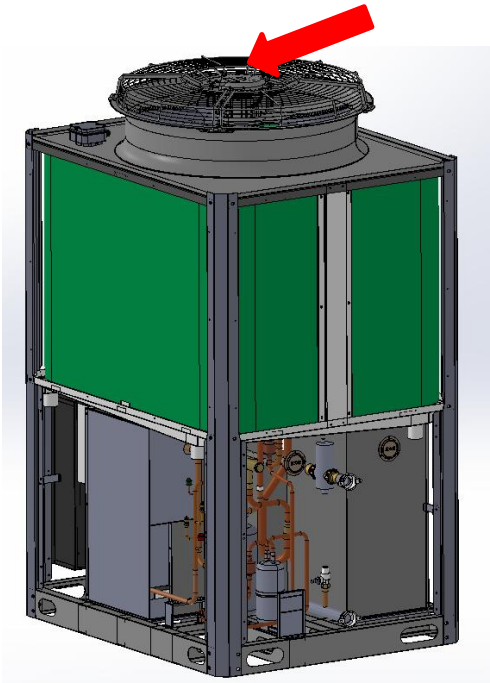 	While the unit is running, check whether the fan is operating normally or not, or check the fan speed parameter through the controller. If the fan speed parameter is 0, check whether the fan terminal wiring is secure or not after power off. **Water system:** 1. After opening heating mode for 5 minutes, check whether the temp difference between the inlet and outlet water is between 4 and 7 degrees Celsius. If the temp difference is too large, maybe the water is not smooth or the water flow is too small. 2. When the unit is on, check whether there is any abnormal noise or not when the water pump is running, and whether the water flow is sufficient or not. If the flow and head of water pump are not enough, the unit needs to be replaced with a suitable matching water pump. Please recalculate and select a suitable water pump according to section 4.3. Pay attention to the installation position and direction of the water pump: (1) the water pump must be installed at the inlet of the unit rather than outlet. 3. Check whether the diameter of the water pipe is too small or not (to avoid small water flow). Make sure the water pipe connection is fairly smooth. (Water Pipe diameter is G1.5")

1#48、2#80 Module xx: n#Compressor low pressure; 1#66、2#98 Module xx: n#Compressor low pressure protection	 	**Electronic control:** 1. Check whether the low pressure switch is damaged or the sensor wire is broken or not. Make sure the wiring terminals are connected correctly (#1 DI8 port, #2 DI10 port). **Refrigerant system:** After turning off the heat pump for 10 minutes, check whether the refrigerant pressure gauge parameters of the unit are normal, and connect to the low-pressure inspection port with pressure gauge to measure whether the refrigerant in the system is normal or not. If it is lower than normal, it indicates a refrigerant leak. Please find the location of the pipe leak, repair it and refill the refrigerant according to the maintenance instructions (operated by professionals). Danger warning: Since it will be in contact with R290 refrigerant, make sure there is no flame, good ventilation, and operate in a safe environment.

0 Module xx: Communication faulty between	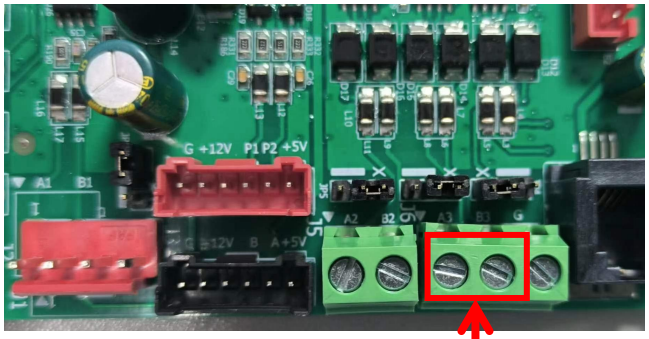 A3 B3	Check the communication cable between cascading modules is connected properly and making good contact. If the communication line is damaged, the terminal falls off or the connection is bad, please replace the communication line and check again.
1#71、2#103 Module xx: n#Inverter module communication failure	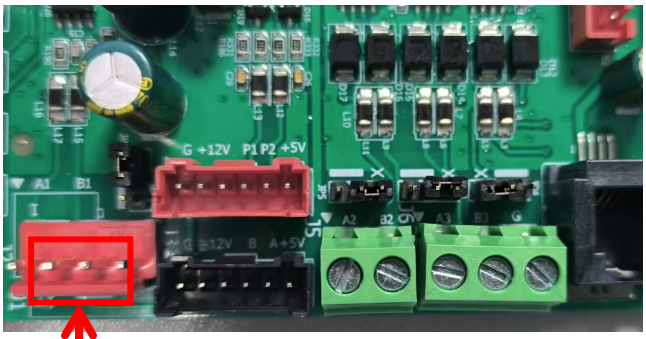 A1 B1	Check the communication cable between inverter drive board and main board is connected properly and making good contact. If the communication line is damaged, the terminal falls off or the connection is bad, please replace the communication line and check again.

1#59、2#91 Exhaust gas temperature too high protection	 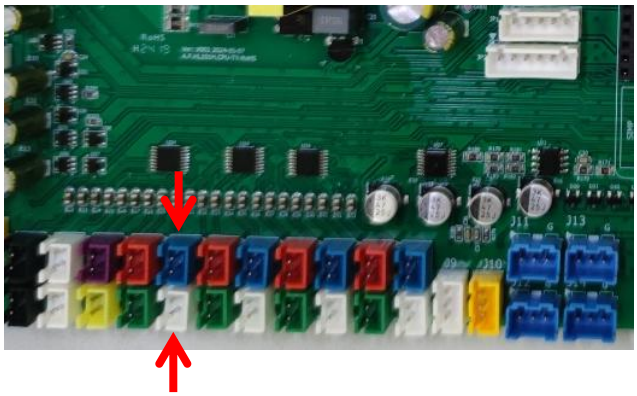	1. After turning off the machine for 10 minutes, check whether the refrigerant pressure gauge parameters of the unit are normal, and use the pressure gauge to measure whether the system refrigerant is normal.(If the refrigerant is below the normal value and the refrigerant is leaked, please check whether there are leakage points in each pipeline. The professional personnel are responsible for repairing the welding leakage point and recharging the refrigerant.) Caution: This operation involves handling R290 refrigerant. Prior to commencing the operation, ensure no open flames, adequate ventilation, and conduct inspections only after confirming environmental safety. 2. The refrigerant circuit of the heat pump cooling system is blocked, necessitating the replacement of the filter. (Professional personnel are responsible for the maintenance operation to replace the filter and recharge the refrigerant.) 3. Check whether the exhaust temperature sensor probe is damaged or detached.(#1 AI10 port, #2 AI9 port) After shutting down the unit and disconnecting the power supply, locate the AI10 and AI9 terminals on the main board and unplug it. Then, use a multi-meter to measure the resistance value (normal resistance value is 50KΩ) to verify correctness. If the resistance value is abnormal, replace the exhaust temperature sensor.

34 System Module: System outlet water temp failure; 35 System Module: System inlet water temp failure; 45 System module: System total water outlet temp fault; 36 System module: Water tank temp fault; 33 System Module: Ambient temp sensor failure; 192 Module xx: 1# Outlet water temperature fault; 1#56、2#88 n# Exhaust temperature fault; 1#55、2#87 n# Fin coil temperature failure； 1#52、2#84 Module xx: n#Suction temperature fault; 213 Module xx: Condenser temp sensor failure	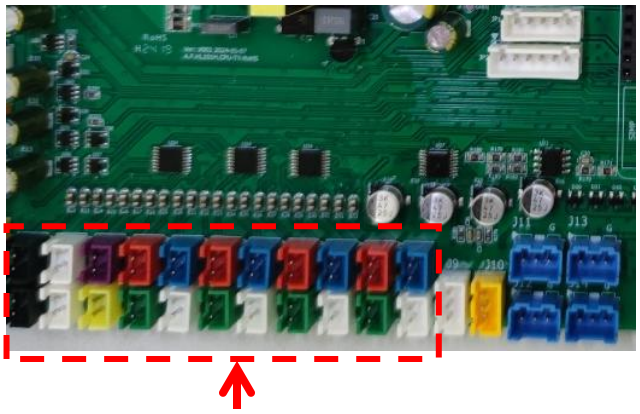 AI11: Total outlet temp sensor AI3: Water inlet temp sensor AI22: Water tank temp sensor AI2: Ambient temp sensor AI4: Water outlet temp sensor AI10: #1 Exhaust temp sensor AI9: #2 Exhaust temp sensor AI6: #1 Fin coil(heating coil) temp sensor AI5: #2 Fin coil(heating coil) temp sensor AI8: #1 Suction temp sensor AI7: #2 Suction temp sensor AI12: #1 Condenser (cooling coil) temp sensor AI5: #2 Condenser(cooling coil) temp sensor	1. Check if the probe wiring is damaged; 2. Check the connection between the temperature sensor and the main board; 3. Check the resistance value of the temperature sensor (10 KΩ). If the resistance value is too low or too high, it indicates that the sensor has a problem and needs to be replaced. Remark: Please see **10.3.1 Main board terminals introduction** to get detail location for each sensor.

1#72、2#104 Module xx: n#Frequency inverter failure	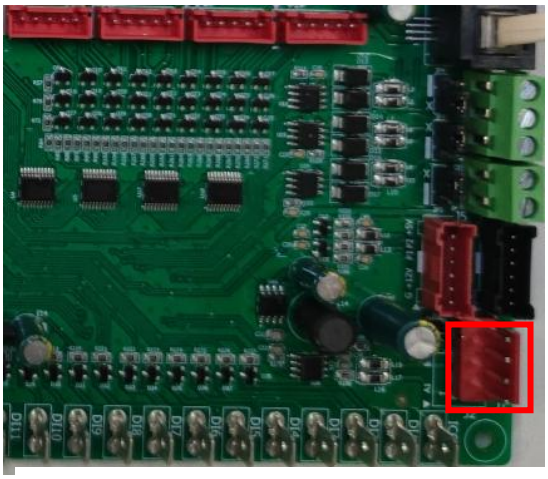 Main board communication port(A1 B1) 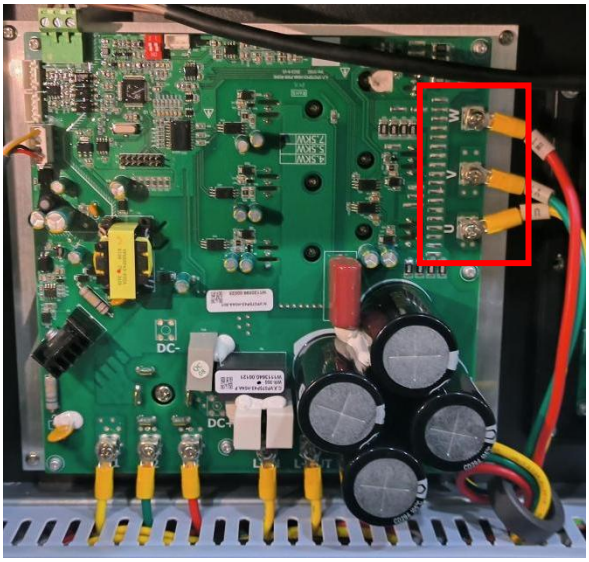 Driver board control port(U V W)	1. Check whether the inverter module is overheated 2. Check whether the inverter module is over-current 3. Check the fault code of the corresponding inverter module.

1#248、2#250 Module xx: EC fan fault	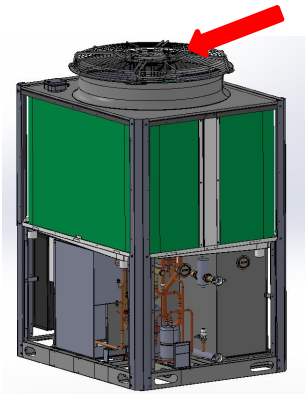 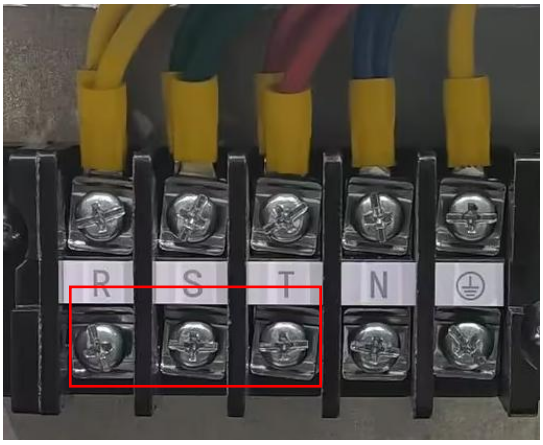 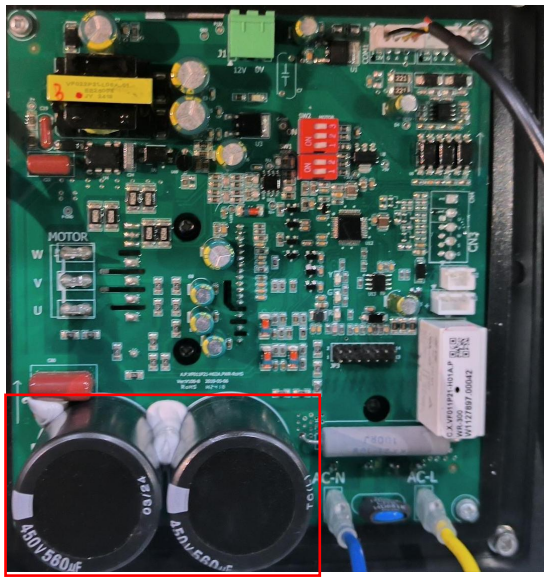 	1. Check if the fan is not rotating, inspect the heat sink behind the inverter drive board for any dirt or blockages, promptly clean it, and then restart the unit. 2. Examine the installation position of the unit to see if the air side is obstructed. 3.Use the multi-meter to detect whether it's protected by reverse phase(Fig 2), if yes, please exchange the connection of the two neighboring wires incoming to the power supply of the unit. 4.Check if there is any fault to the capacitor, if yes, then replace it with a new one with same specification. (Fig 3)

1#247、2#249 Module xx: EC fan communication failure	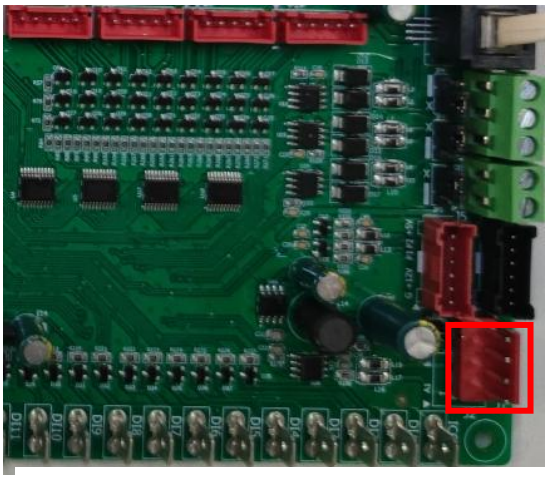 Main board communication port(A1 B1) 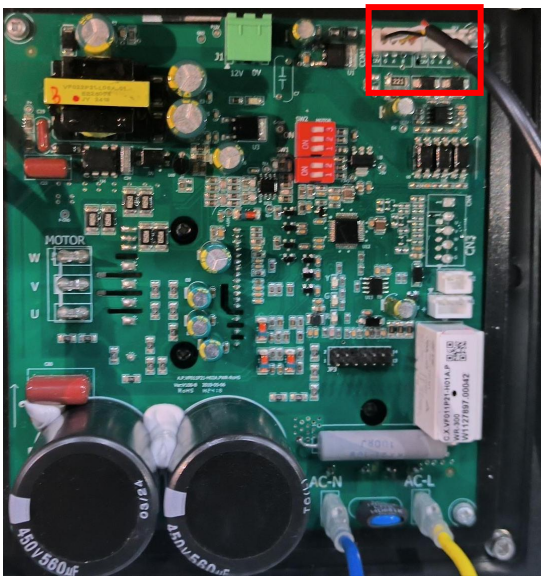 Communication port between fan motor board and main board COM1)	Check the communication cable between fan motor board and main board is connected properly and making good contact. If the communication line is damaged, the terminal falls off or the connection is bad, please replace the communication line and check again.

208 R290 sensor failure	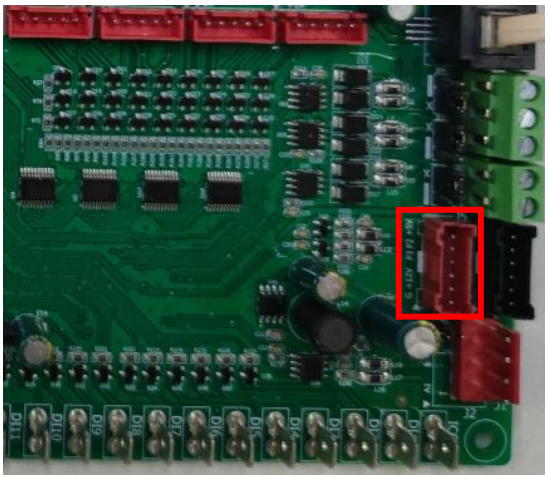 R290 Detection port	1.Check if the probe wiring is damaged; 2.Check the connection between the temperature sensor and the main board.
209 R290 refrigerant leakage alarm	 R290 refrigerant leakage sensor	The refrigerant leakage sensor is used to detect and monitor the leakage of R290 refrigerant, ensuring the safety and efficiency of the system. When the leakage concentration exceeds 15% LFL, the system will sound an alarm and display fault code 209, reminding users to handle it in a timely manner to ensure safe use. The compressor and all electric heating will stop, and the fan is running at the lowest speed. **Solution:** Power off the unit immediately, keep good ventilate, check the refrigerant leakage point of the unit, and repair it. (Professional installation personnel are required to operate it)

10.3.5 Common faults and debugging

◎ If users have any problems in the process of work, they must hire professional maintenance personnel for maintenance. Maintenance personnel may refer to the chart for debugging.

fault	Possible Reasons	Solutions
The heat pump is not running	1. Power failure **2.** Loose wiring 3. blown fuse **4.** Low pressure is too low	**1.** Turn off the power supply switch and check the power supply condition **2.** Find out the cause and repair it **3.** Replace the fuse **4.** Test the voltage and the current
The water circulation pump is working but no water circulation or high noise of the water pump	**1.** Lack of water in the system **2.** There is air in the water system **3.** These valves are not all open **4.** The water filter is very dirty and blocked	**1.** Check the system supplement device, and complete the system **2.** Exhaust the air in the water system 3. Open the water supply system valve **4.** Clean the water filter
Low heating capacity	**1.** Lack of refrigerant **2.** Poor thermal insulation of the water system; **3.** Dry filter is blocked **4.** The air heat exchanger has poor heat dissipation **5.** Water is insufficient	**1.** Leakage detection and charge sufficient refrigerant **2.** Strengthen the thermal insulation of the water supply system **3.** Replace dry filter 4. Clean the air heat exchanger **5.** Clean the filter
The compressor does not work	**1.** Power supply failure **2.** Compressor contactor is damaged; **3.** The wiring is loose **4.** Compressor overheat protection 5. Water outlet temperature is too high **6.** Water flow is insufficient **7.** Compressor overload protector has tripping operation	**1.** Find out the cause, and solve the power supply failure problem **2.** Replace the compressor contactor **3.** Find out the loose point and repair it **4.** Check the unit pressure and the exhaust temperature. **5.** Reset the water temperature **6.** Clean the water filter and exhaust the air from the system **7.** Check the running current and check if the overload protector is damaged
The compressor operating noise is too high	**1.** The liquid refrigerant enters into the compressor **2.** Internal parts of the compressor are damaged **3.** Power voltage is too low	**1.** Check if the expansion valve has failure 2. Replace the compressor 3. Check the power voltage
The fan does not work	**1.** The fastening screw of the fan motor is loose **2.** The fan motor is damaged **3.** Contractor is damaged	**1.** Fix the screw **2.** Replace fan motor **3.** Replace the contractor

The compressor is working, but the heat pump does not provide heating	**1.** All the refrigerant leaks completely **2.** Compressor failure **3.** Compressor reversal	**1.** Check the leakage and fill with refrigerant **2.** Replace the compressor **3.** Exchange the phase sequence of the compressor
Low water flow protection	**1.** Insufficient water flow in the system **2.** Failure of water flow switch failure	**1.** Clean the water filter system and exhaust the air from the system **2.** Check and replace the water flow switch

11.WIFI connection and operation

11.1 Usage Notice

Dear Customer:

Thank you for choosing our products! For your convenience, please read the manual carefully and follow the steps in the manual.

11.2 APP Download

Research "smart life" in APP STORE or GOOGLE PLAY to install the APP.

11.3 Connect Your Phone to Wi-Fi

Make sure that the mobile phone and the device to be connected are in the same Wi-Fi environment. Select the 2.4GHz Wi-Fi network on the mobile phone and enter the password to connect the mobile phone to the network.

***Note:** If the Wi-Fi in the current environment is 5GHz, please set the router to 2.4GHz first.

11.4 Check the device WIFI status

1. Enter the settings menu interface, select "WIFI setting".

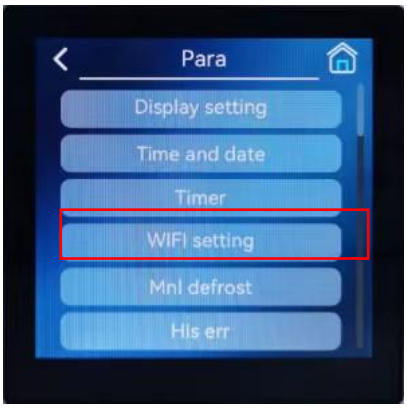

2. Check if the message "Smart mode is being configured" is displayed in the interface, if other messages are displayed, press and hold the < Reset WIF > key to reset the WiFi.

11.5 Add Device

1) Turn on the mobile phone Wi-Fi and Bluetooth.

2) Open the **Smart Life** APP on the mobile phone, and select **"Home"** in the bottom navigation bar;

3) Click the **"+"** button in the upper right corner of the home page, or click the **"Add Device"** button in the center of the home page to enter the device adding interface;

4) In the device adding interface, please try to add the device in one of the following ways:

A.Automatic device discovery

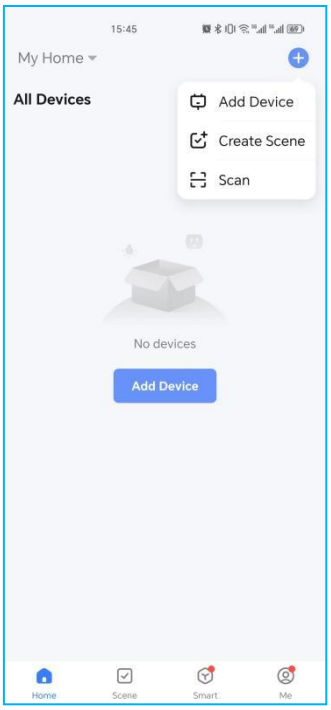

The phone will automatically discover available devices nearby. After discovering the device, follow the instructions in the figure below to complete the subsequent network configuration operations.

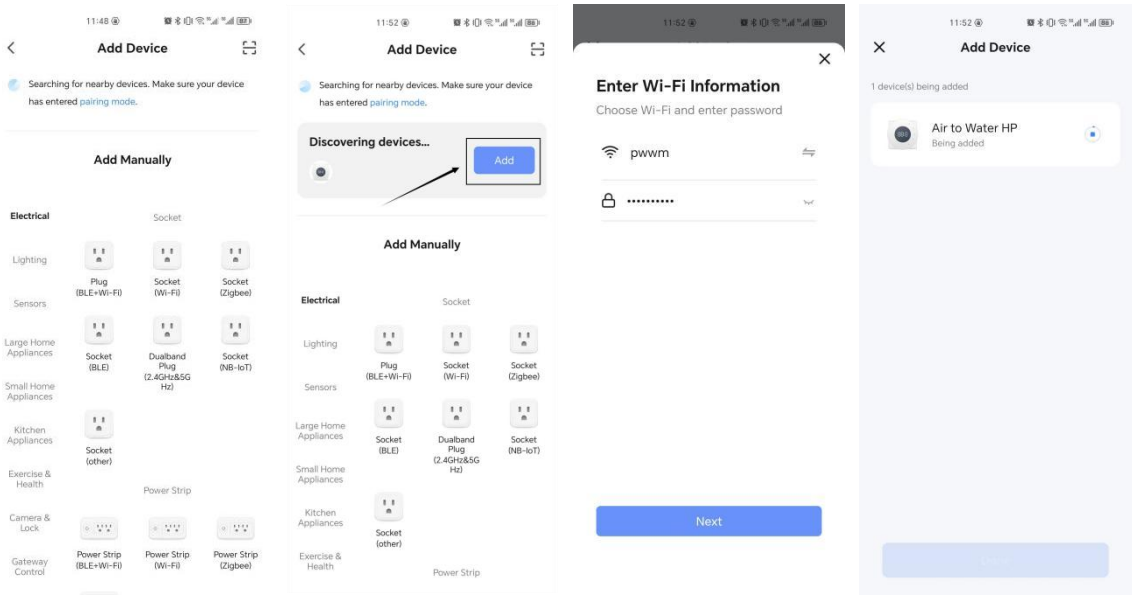

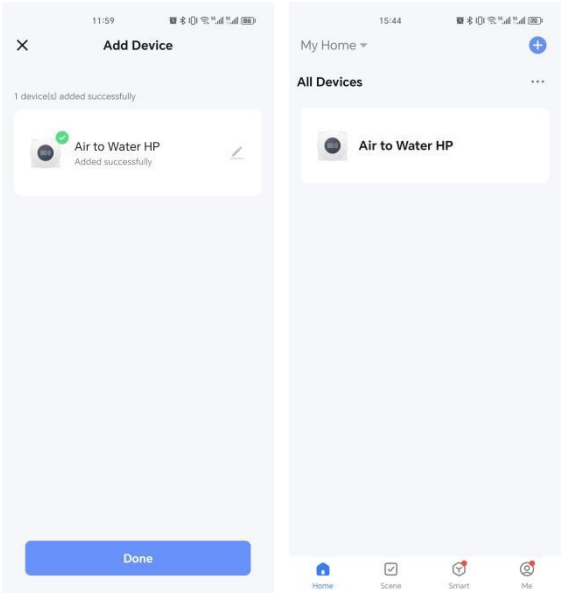

B.Manually adding devices

After entering the add device interface, go down and select "Intelligent Heat Pump" in your home appliance, and follow the steps in the following diagram to complete the operation.

***Note**: If you have checked and confirmed that the WIFI status of the device is correct, under the step of **"Reset the device"**, please directly check **"Confirm WIFI status"** and click the **"Next"** button to directly configure the network without the need to reset the device.

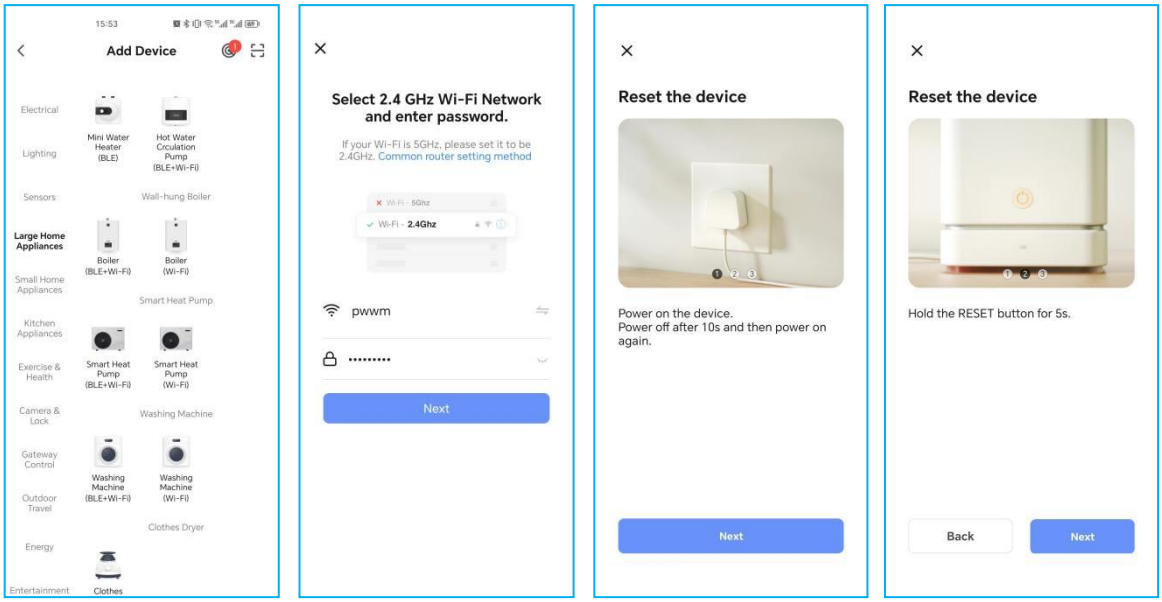

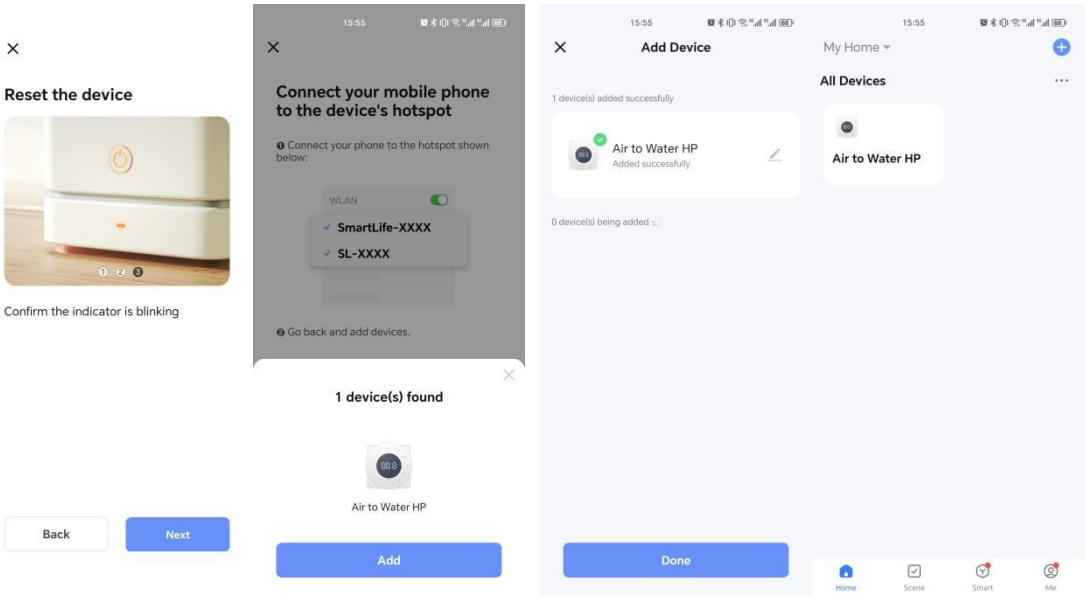
Reset the device
Confirm the indicator is blinking
Back
Next
15:55
Connect your mobile phone to the device's hotspot
❶ Connect your phone to the hotspot shown below:
WLAN
SmartLife-XXXX
SL-XXXX
❷ Go back and add devices.
1 device(s) found
Air to Water HP
Add
15:55
Add Device
1 device(s) added successfully
Air to Water HP
Added successfully
0 device(s) being added
Done
15:55
My Home
All Devices
Air to Water HP
Home
Scene
Smart
Me

11.6 Interface style

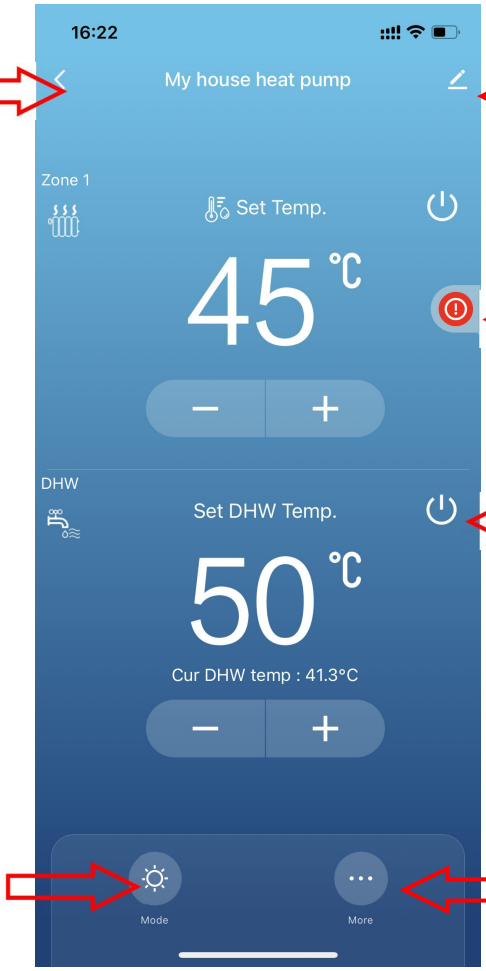

Return

More: You can change the device name, select the device installation location, check the network status, add shared users, create a device group, view

Fault information: display fault information when a fault occurs.

Power button: click to turn on/off

Mode switching: Click to select the mode to be switched

Parameters Query: View unit status data

Main Interface

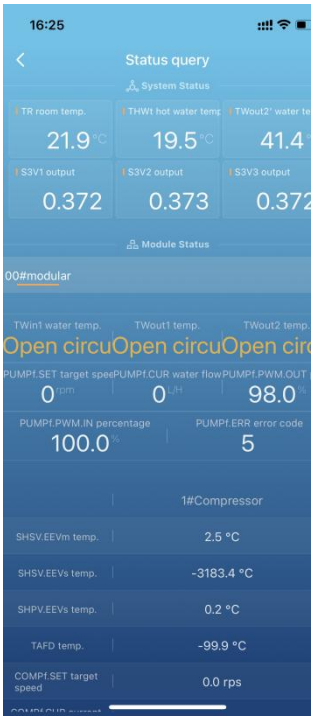

Status Inquiry Screen

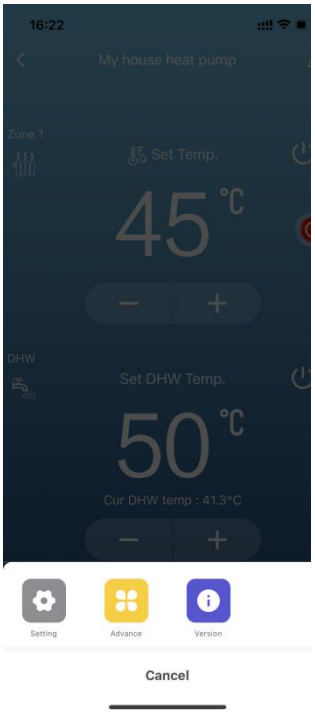

More menu bars

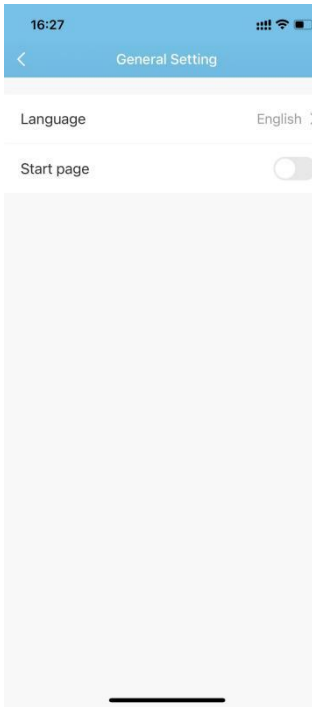

General setting interface

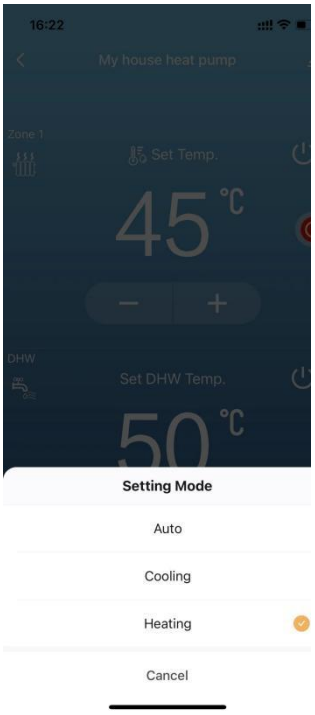

Mode selection interface

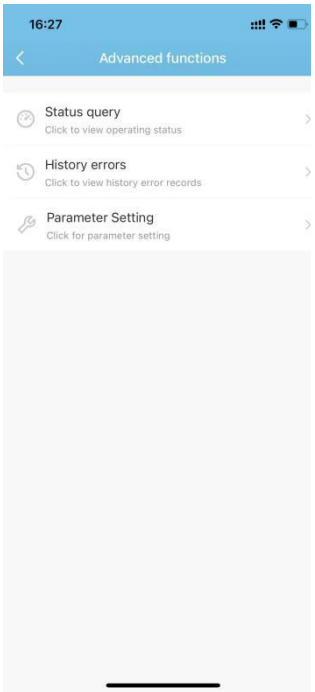

Advanced Function Interface

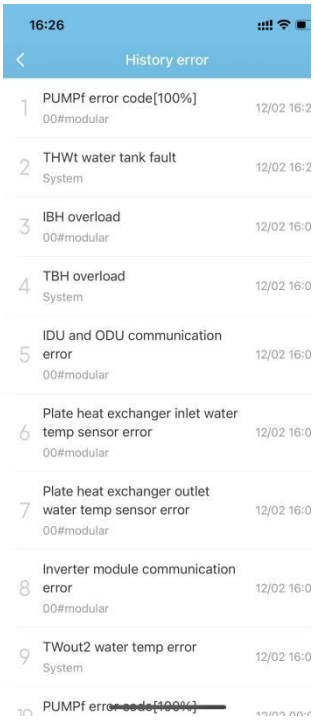

History error Screen

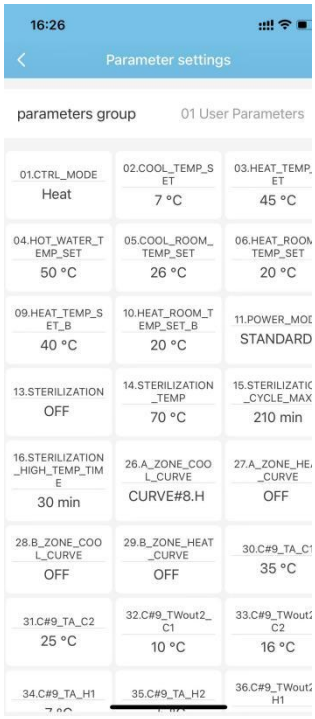

Parameter setting interface

11.7 Equipment sharing

◎Share the bound device, the sharer operates in the following sequence.

◎After successful sharing, the list will be increased and show the shared person.

◎To delete the shared person, long press the selected user, the delete interface will pop up, click "Delete".

◎The operation of the sharing interface is as follows:

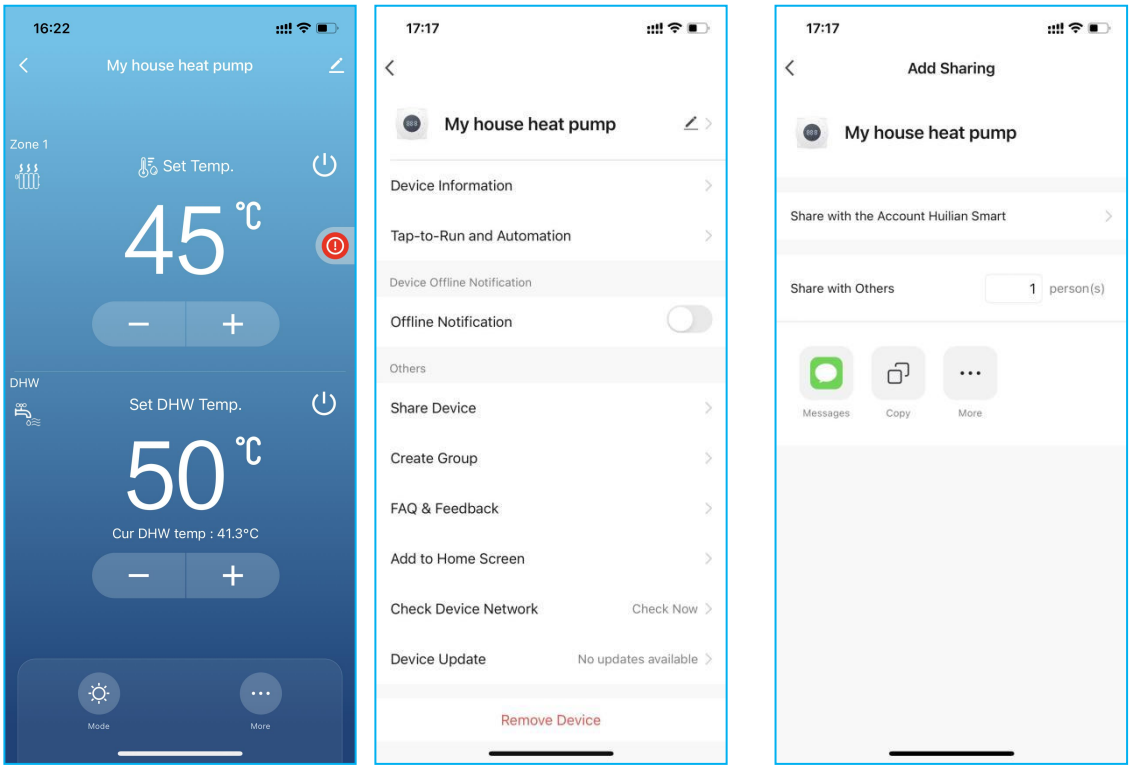

◎Input the account of the shared person, click "Done", the shared success list will display the account of the newly-added shared person. The shared person showing the received shared device, click in to operate and control the device.

Appendix

A.User Parameters Explanation

No	Setting item	Setting range	Default	Unit	Description
1	Mode	Cooling mode Heating mode Auto mode Hot water mode Hot water&Cooling mode Hot water&Heating mode	Heating mode	/	It means you can choose different operation mode base on your requirement, but plz mention that when you choose dual mode, the unit will run hot water mode firstly, then run heating or cooling mode.
2	Cooling setting temp	min…max	12	℃	Your required cooling temp, which is always lower than your ideal indoor room temp.
3	Heating setting temp	min…max	40	℃	Your required heating temp, which is always higher than your ideal indoor room temp.
4	Hot water setting temp	min…max	50	℃	Your required hot water temp.
6	The power-on energy adjustment function	disable enable	enable	/	The function works when the power is just on by a special logic judging by the difference between ambient temp and setting temp and other parameters.
8	Heating target compensation	disable available	disable	/	The function is meant to change the setting temp by unit itself when **ambient temp changes,** which replace the user's action and make it more convenient. The unit automatically sets the cooling/heating setting temp basing on the current ambient temp. There are some calculation formulas which contains the cooling/heating temp compensation temps and cooling/heating temp compensation ambient temps in the program. The unit will update the cooling/heating setting temp after a compensation update cycle.
9	Heating compensation temp 1	min…max	40	℃	
10	Heating compensation temp 2	min…max	45	℃	
11	Heating compensation ambient temp 1	min…max	5	℃	
12	Heating compensation ambient temp 2	min…max	-20	℃	
13	Cooling target compensation	disable available	disable	/	
14	Cooling compensation temp 1	min…max	12	℃	
15	Cooling compensation	min…max	17	℃	

	temp 2				
16	Cooling compensation ambient temp1	min…max	34	℃	
17	Cooling compensation ambient temp 2	min…max	29	℃	
18	Compensation update cycle	0~59	30	min	
19	On-duty function	disable available	disable	/	The function is meant to change the setting temp by unit itself when **there are some special time(like 20:00 to 5:00)**, which replace the user action and make it more convenient. The unit automatically sets the cooling/heating setting temp basing on the cooling/heating on-duty temp during the on-duty time. You can set the on-duty start and stop time to define the on-duty duration.
20	Heating on-duty temp	min…max	28	℃	
21	Cooling on-duty temp	min…max	17	℃	
22	On-duty start o'clock	0~23	20	h	
23	On-duty start min	0~59	0	min	
24	On-duty stop o'clock	0~23	5	h	
25	On-duty stop min	0~59	0	min	
26	Alarm tone setting	Mute Long ring Ring for 10s Ring period of 10s	2	/	Alarm tone setting
27	Sterilization start week day	Sunday Monday Tuesday Wednesday Thursday Friday Saturday	Sunday	/	The function is meant to purify the water and sterilization. You can set the week day and the start time to run sterilization mode.
28	Sterilization start hour	0~23	0	h	
29	Sterilization start min	0~59	0	min	
30	Timed sterilization function	disable available	disable	/	

B.Commissioning Checklist

<table>
<tr><td colspan="2">Installer name</td><td colspan="2"></td><td colspan="2">Install engineer/Telephone</td><td colspan="2"></td></tr>
<tr><td colspan="2" rowspan="5">User’s basic information</td><td>Name/Telephone</td><td colspan="5"></td></tr>
<tr><td>Install address</td><td colspan="5"></td></tr>
<tr><td>Area</td><td>m</td><td colspan="2">Building insulation</td><td colspan="2"></td></tr>
<tr><td>User’s end device</td><td colspan="5">Radiator□ Floor heating□ Fan coil□ Domestic hot water□
Swimming pool heat pump□ Others□ Remarks:</td></tr>
<tr><td>Actual input voltage</td><td colspan="2">V</td><td>Actual water pressure</td><td colspan="2">MPa</td></tr>
<tr><td colspan="3">Heat pump model/Input power</td><td colspan="2"></td><td>Heat pump pressure gauge value</td><td>MPa</td></tr>
<tr><td colspan="2">Heat pump install position</td><td colspan="3">Outdoor□ In the yard□ Rooftop□
Wall split□ Others□</td><td>Install base bracket</td><td>Concrete□ Steel structure□
Rubber Shock Pad□</td></tr>
<tr><td colspan="8">Heat pump installation and commissioning steps</td></tr>
<tr><td>1</td><td colspan="4">Measure the user's power supply voltage with a multi-meter, check the tap water pressure, and check if the installation position is appropriate;(Water pressure of tap water ≥ 0.2MPa, 0.25~0.4MPa is normal).</td><td>Conclusion</td><td colspan="2">Qualified□
Abnormal:</td></tr>
<tr><td>2</td><td colspan="4">Wear gloves and unpack to inspect the appearance of the heat pump for any damage; If the heat pump has a pressure gauge, check the pressure value(With the ambient temp 10~25℃, the normal Static pressure within 0.6-1.0MPA);
Some heat pumps don’t have a pressure gauge. Open the front panel to check the needle valve welded on the copper pipe, unscrew the needle valve port and connect a refrigerant gauge to check the pressure value, or press the top pin inside the needle valve to check the pressure value or check whether there is refrigerant overflow;(The blue tube of the pressure gauge is connected to the low pressure pipe, and the red pipe is connected to the high-pressure pipe. The yellow tube is used to connect the refrigerant tank or vacuum pump).</td><td>Conclusion</td><td colspan="2">Qualified□
Abnormal:</td></tr>
</table>

3	Install the heat pump on a solid foundation, install shock rubber pads to fix the device, fix the water tank, and reserve the installation position of the water pump and valves; Reserve heat pump floor drainage; Reserve the position of the power supply port.	Conclusion	Qualified□ Abnormal:
4	According to the installation diagram, check the connection of pipeline joints for accessories such as heat pumps, water tanks, valves, filters, and water pumps; Determine whether the installation direction of the water pump, and valve components is correct.	Conclusion	Qualified□ Abnormal:
5	According to the installation diagram, check if the installed pipeline accessories are correct, conduct water pressure and leakage testing, empty the water pump, and empty the water tank; (Water pressure of tap water ≥ 0.2MPa); **Water pump exhaust air:** First, turn off the water pump, close the inlet and outlet valves, open the exhaust valve on the water pump circulation pipe, and patiently wait for a few minutes to completely discharge the air; **Water tank exhaust air:** Simply open the exhaust valve at the top of the water tank and let it out for a few minutes; Or open the valve reserved on the circulating pipe of the heat pump and exhaust for a few minutes. **Water pipeline exhaust air:** Open the exhaust port at the terminal (such as radiators, underfloor heaters, etc.) and exhaust directly until no creaking gas sound, indicating that the exhaust has been completed.	Conclusion	Qualified□ Abnormal:
6	According to the wiring diagram of the heat pump, connect the power wires of the heat pump, install the water tank sensor, install the operation panel, connect the power wire of the water pump, and other necessary circuits to connect the heat pump.	Conclusion	Qualified□ Abnormal:
7	According to the wiring diagram of the heat pump, check whether the power cord is tightened, whether the sensor position is correct, and whether the wiring position is fixed to ensure the protection of the circuit.	Conclusion	Qualified□ Abnormal:
8	After the above checks are normal, open all water valves; Power on inspection, first use a multi-meter to check if the power supply voltage is normal (The voltage fluctuation range of the inverter unit is ± **10%**).	Conclusion	Qualified□ Abnormal:
9	According to the instructions in the manual, use the operation panel to start up and run, check the operation of the water pump, and recheck whether there is any water leakage problem in the pipeline; No water leakage, insulation should be applied to all pipelines.	Conclusion	Qualified□ Abnormal:

10	Check if the drainage of the heat pump chassis is reasonable and smooth without water accumulation (if the weather is dry and does not produce condensation, tap water can be used to simulate the drainage situation).	Conclusion	Qualified□ Abnormal:
11	According to the heat pump manual, check the temperature status and pressure gauge values of the heat pump after ten minutes of normal operation; Checking if the water outlet temp, water inlet temp, exhaust temp, high pressure and the voltage are reasonable.	Conclusion	Qualified□ Abnormal:
12	After installation and commissioning, the customer can operate the heat pump control panel according to the instructions, such as adjusting the temperature, checking the temperature status of the heat pump, daily maintenance and protection of the heat pump, and regular maintenance and inspection.	Conclusion	Qualified□ Abnormal:
Installation engineer's master rechecks and confirms/notes			
User’s confirmation		Date	

C.Reference parameters of the operation state for the heat pump

Note: This parameter is only a **theoretical value and is for reference only.** Please note that there are differences among different units. In addition, in low-temperature heating mode, the parameters for different states such as frost formation, slight frost formation, and severe frost formation are also different. If there are significant differences, please consult the supplier for advice.

R290 Heat Pump Judgement Table (for reference only)					
Heating					
Ambient temperature 30~43℃	Outlet water temperature ℃	Exhaust gas temperature ℃	Return gas temperature ℃	Evaporator Coil temperature ℃	Pressure MPa
	25	30~60	22~37	20~35	0.8~1.4
	30	35~65	22~37	20~35	0.9~1.6
	35	40~70	22~37	20~35	1.0~1.7
	40	45~75	23~38	21~36	1.1~1.8
	45	50~80	23~38	21~36	1.3~2.0
	50	55~85	23~40	22~38	1.5~2.2
	55	60~90	23~40	22~38	1.6~2.3
	60	65~95	23~40	22~38	1.7~2.4

Heating					
Ambient temperature 20~30℃	Outlet water temperature ℃	Exhaust gas temperature ℃	Return gas temperature ℃	Evaporator Coil temperature ℃	Pressure MPa
	25	30~60	12~26	10~24	0.8~1.4
	30	35~65	12~26	10~24	0.9~1.6
	35	40~70	12~26	10~24	1.0~1.7
	40	45~75	13~27	11~25	1.1~1.8
	45	50~80	13~27	11~25	1.3~2.0
	50	55~85	14~28	12~26	1.5~2.2
	55	60~90	14~28	12~26	1.6~2.3
	60	65~95	14~28	12~26	1.7~2.4

Heating					
Ambient temperature 10~20℃	Outlet water temperature ℃	Exhaust gas temperature ℃	Return gas temperature ℃	Evaporator Coil temperature ℃	Pressure MPa
	25	30~60	2~16	0~14	0.8~1.4
	30	35~65	2~16	0~14	0.9~1.6
	35	40~70	2~16	0~14	1.0~1.7

	40	45~75	3~17	1~15	1.1~1.8
	45	50~80	3~17	1~15	1.3~2.0
	50	55~85	4~18	2~16	1.5~2.2
	55	60~90	4~18	2~16	1.6~2.3
	60	65~95	4~18	2~16	1.7~2.4

Cooling					
Ambient temperature 30~43℃	Outlet water temperature ℃	Exhaust gas temperature ℃	Return gas temperature ℃	Evaporator Coil temperature ℃	Pressure MPa
	15	60~95	12~17	30~58	1.2~2.1
	20	60~95	17~22	30~58	1.2~2.1
	30	60~95	25~32	30~60	1.2~2.2

Cooling					
Ambient temperature 20~30℃	Outlet water temperature ℃	Exhaust gas temperature ℃	Return gas temperature ℃	Evaporator Coil temperature ℃	Pressure MPa
	15	55~80	12~17	30~50	1.0~1.8
	20	55~80	17~22	30~50	1.0~1.8
	30	55~80	25~32	30~50	1.0~1.8
	40	55~80	35~42	30~50	1.0~1.8

Cooling					
Ambient temperature 10~20℃	Outlet water temperature ℃	Exhaust gas temperature ℃	Return gas temperature ℃	Evaporator Coil temperature ℃	Pressure MPa
	15	50~75	12~17	25~42	0.8~1.6
	20	50~75	17~22	25~42	0.8~1.6
	30	50~75	25~32	25~45	0.8~1.6
	40	50~75	35~42	25~45	0.8~1.6